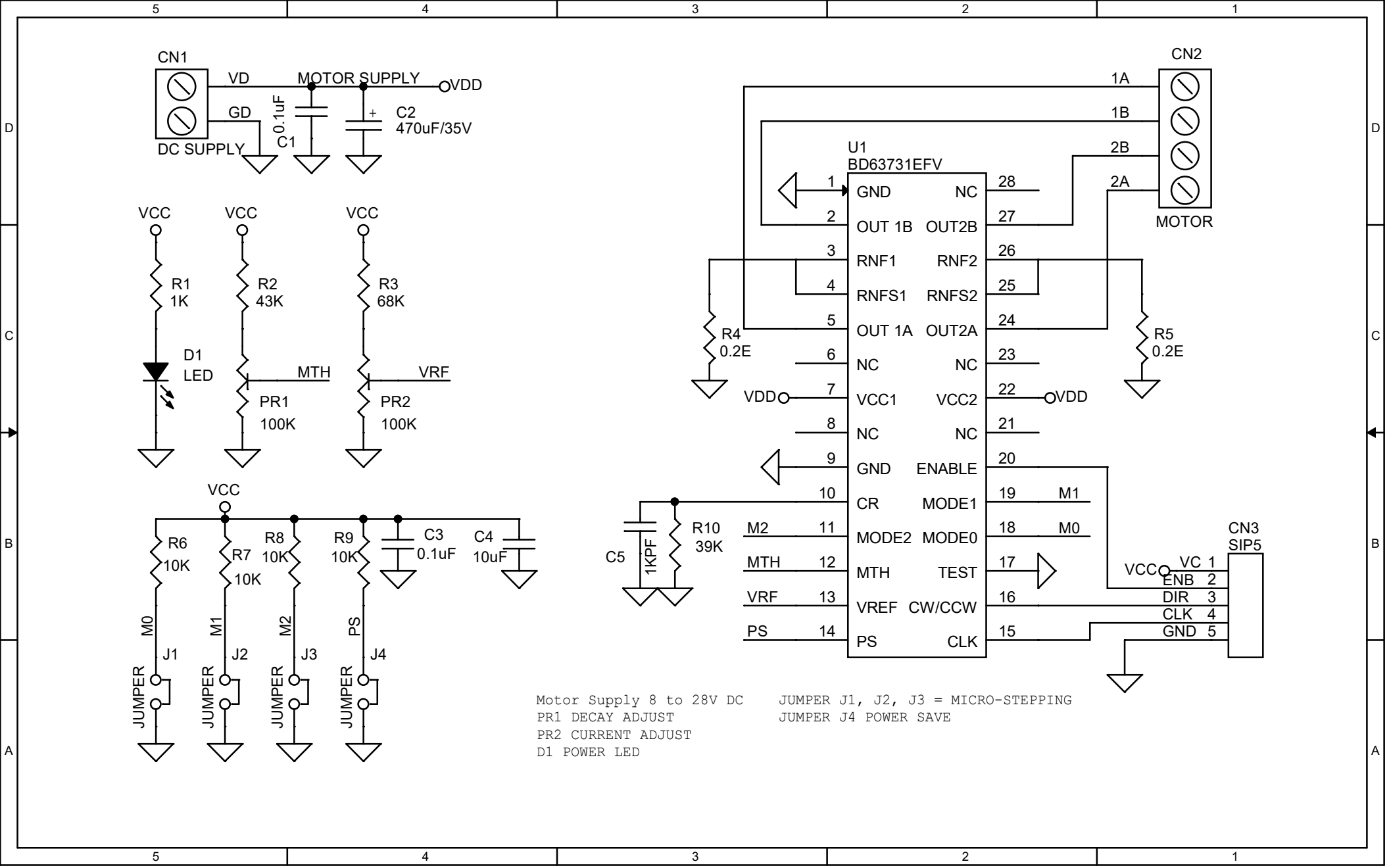
CN1
VD
GD
DC SUPPLY
MOTOR SUPPLY
VDD
C1
0.1uF
C2
470uF/35V
CN2
1A
1B
2B
2A
MOTOR
U1
BD63731EFV
GND
OUT 1B
RNF1
RNFS1
OUT 1A
NC
VCC1
NC
GND
CR
MODE2
MTH
VREF
PS
NC
OUT2B
RNF2
RNFS2
OUT2A
NC
VCC2
NC
ENABLE
MODE1
MODE0
TEST
CW/CCW
CLK
VDD
R4
0.2E
R5
0.2E
VCC
R1
1K
D1
LED
R2
43K
MTH
PR1
100K
R3
68K
VRF
PR2
100K
R6
10K
R7
10K
R8
10K
R9
10K
C3
0.1uF
C4
10uF
M0
M1
M2
PS
J1
J2
J3
J4
JUMPER
C5
1KPF
R10
39K
M2
MTH
VRF
PS
M1
M0
CN3
SIP5
VC
ENB
DIR
CLK
GND
Motor Supply 8 to 28V DC
PR1 DECAY ADJUST
PR2 CURRENT ADJUST
D1 POWER LED
JUMPER J1, J2, J3 = MICRO-STEPPING
JUMPER J4 POWER SAVE