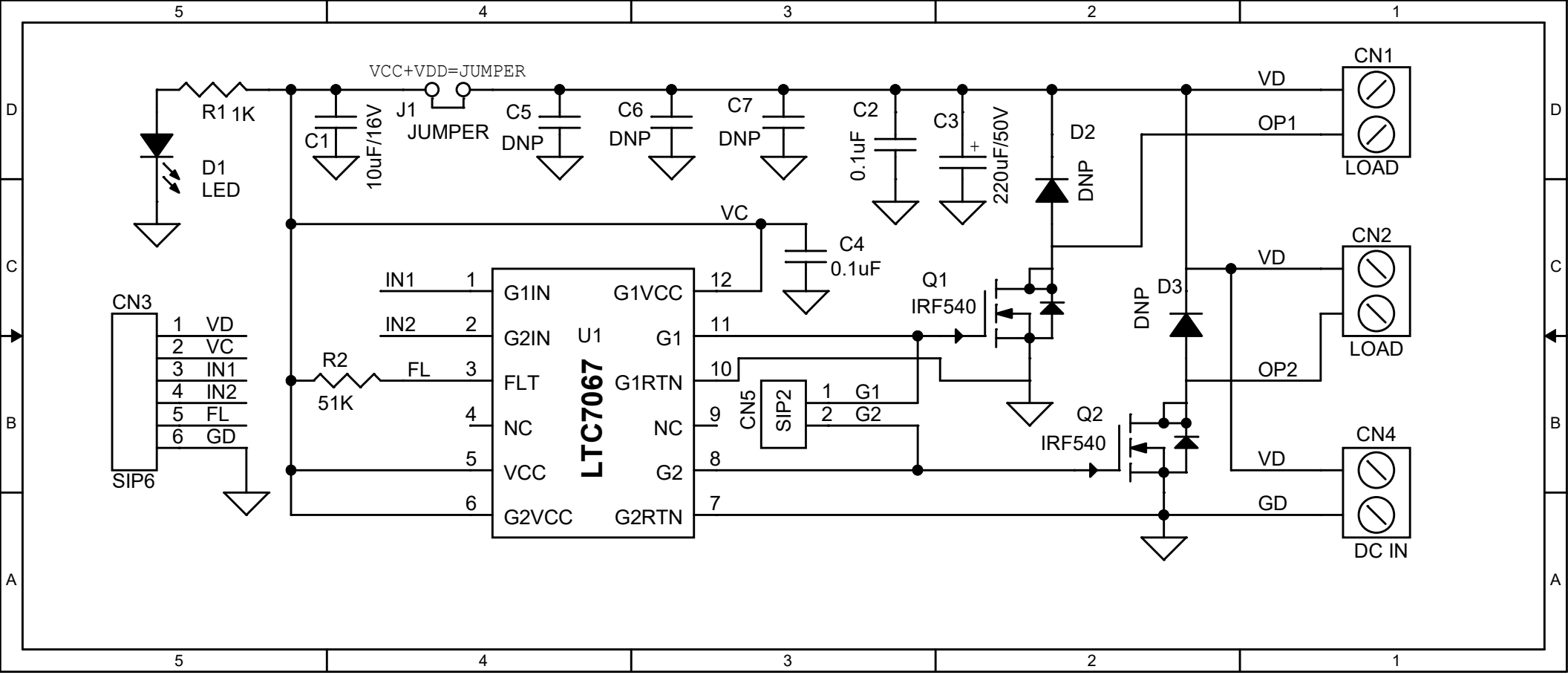
VCC+VDD=JUMPER
R1 1K
D1
LED
C1
10uF/16V
J1
JUMPER
C5
DNP
C6
DNP
C7
DNP
C2
0.1uF
C3
220uF/50V
D2
DNP
CN1
VD
OP1
LOAD
VC
C4
0.1uF
CN2
VD
OP2
LOAD
CN3
1 VD
2 VC
3 IN1
4 IN2
5 FL
6 GD
SIP6
IN1
IN2
R2
51K
FL
G1IN
G2IN
FLT
NC
VCC
G2VCC
U1
LTC7067
G1VCC
G1
G1RTN
NC
G2
G2RTN
Q1
IRF540
DNP
D3
CN5
SIP2
1 G1
2 G2
Q2
IRF540
CN4
VD
GD
DC IN