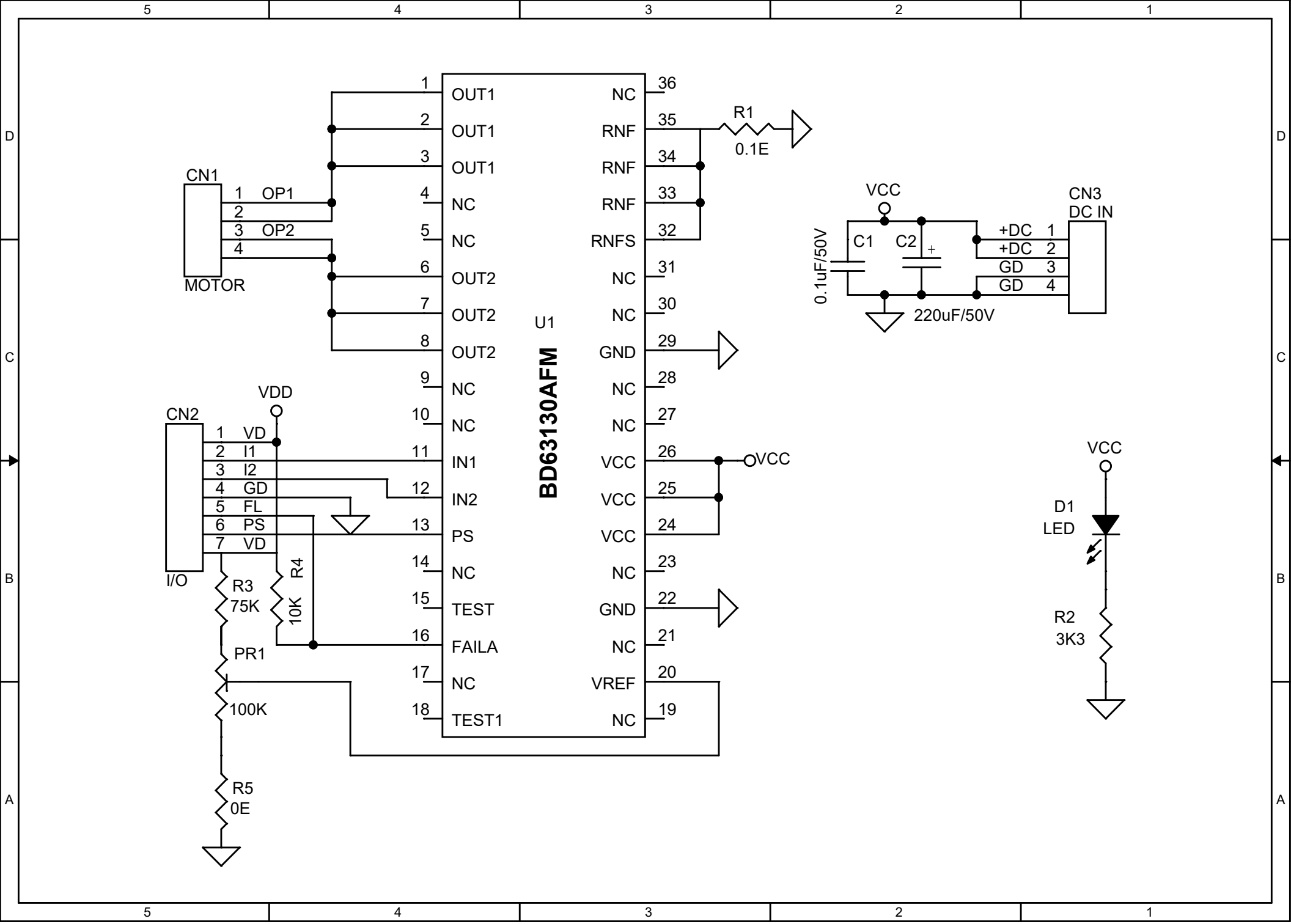
U1
BD63130AFM
OUT1
OUT1
OUT1
NC
NC
OUT2
OUT2
OUT2
NC
NC
IN1
IN2
PS
NC
TEST
FAILA
NC
TEST1
NC
RNF
RNF
RNF
RNFS
NC
NC
GND
NC
NC
NC
VCC
VCC
VCC
NC
GND
NC
VREF
NC
R1
0.1E
CN1
OP1
OP2
MOTOR
CN2
VD
I1
I2
GD
FL
PS
VD
I/O
VDD
R3
75K
R4
10K
PR1
100K
R5
0E
VCC
C1
C2
0.1uF/50V
220uF/50V
CN3
DC IN
+DC
+DC
GD
GD
D1
LED
R2
3K3