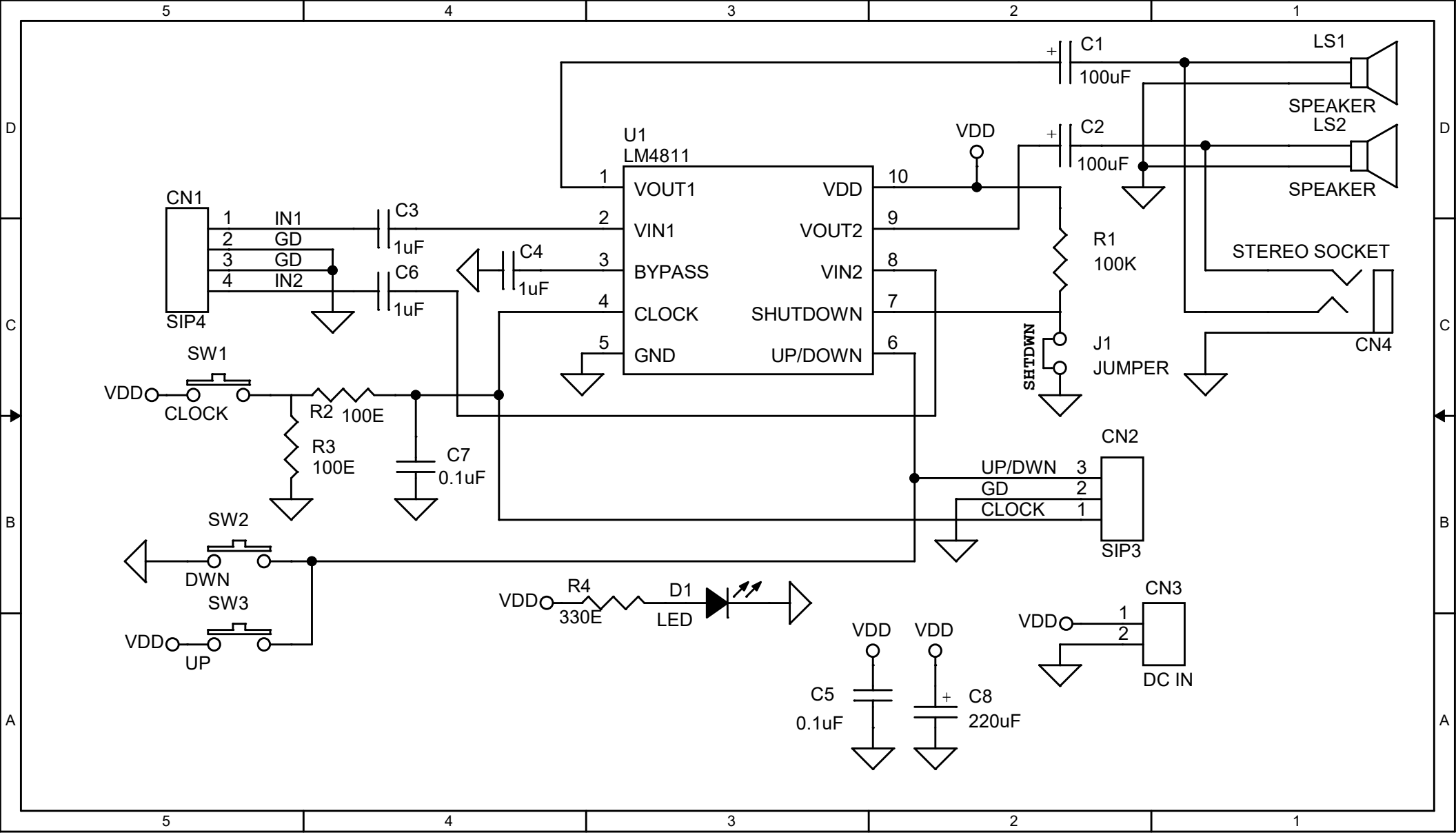
C1
100uF
LS1
SPEAKER
LS2
SPEAKER
U1
LM4811
VDD
C2
100uF
VOUT1
VIN1
BYPASS
CLOCK
GND
VDD
VOUT2
VIN2
SHUTDOWN
UP/DOWN
CN1
IN1
GD
GD
IN2
SIP4
C3
1uF
C6
1uF
C4
1uF
R1
100K
STEREO SOCKET
CN4
SHTDWN
J1
JUMPER
SW1
VDD
CLOCK
R2
100E
R3
100E
C7
0.1uF
CN2
UP/DWN
GD
CLOCK
SIP3
SW2
DWN
SW3
VDD
UP
VDD
R4
330E
D1
LED
VDD
VDD
C5
0.1uF
C8
220uF
CN3
VDD
DC IN