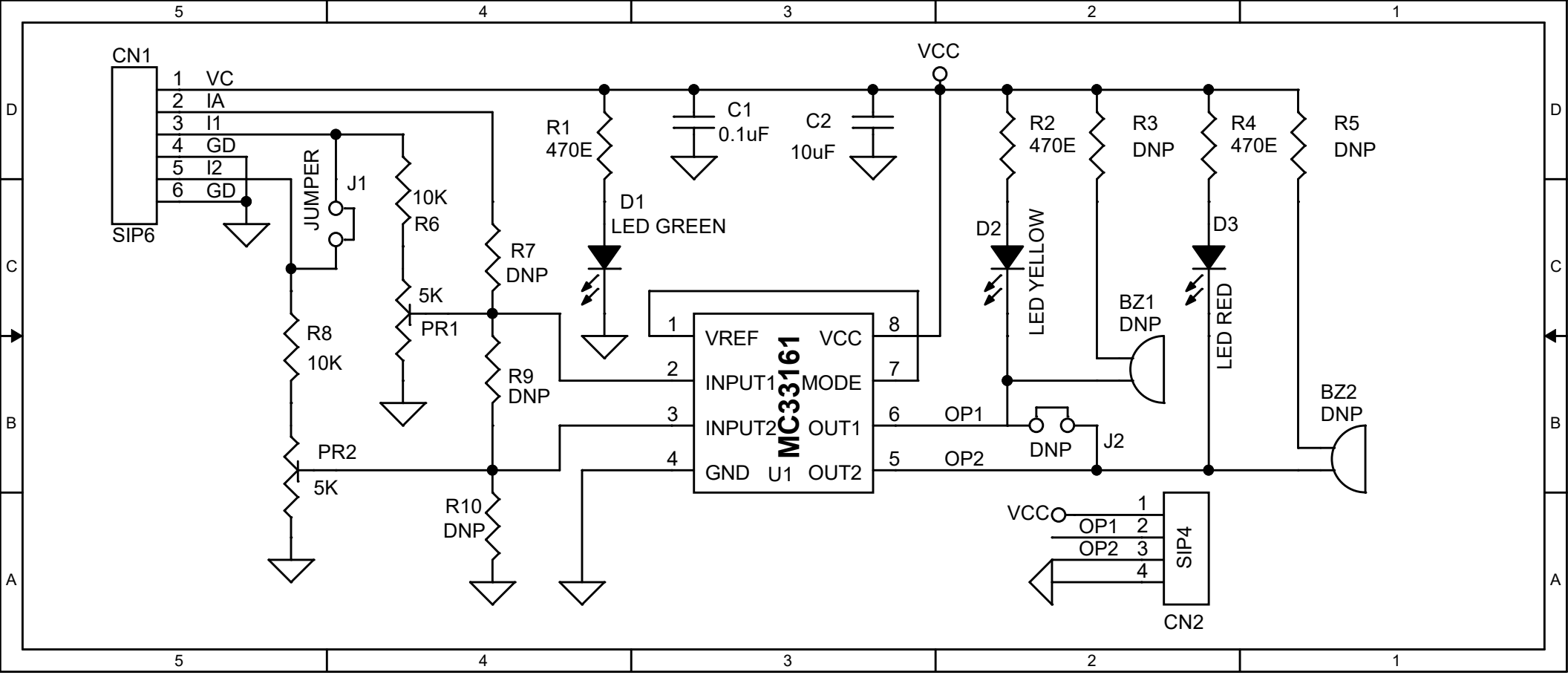
CN1
1 VC
2 IA
3 I1
4 GD
5 I2
6 GD
SIP6
JUMPER
J1
10K
R6
5K
PR1
R7
DNP
R8
10K
R9
DNP
PR2
5K
R10
DNP
R1
470E
D1
LED GREEN
C1
0.1uF
C2
10uF
VCC
VREF
INPUT1
INPUT2
GND
U1
VCC
MODE
OUT1
OUT2
MC33161
OP1
OP2
DNP
J2
R2
470E
D2
LED YELLOW
R3
DNP
BZ1
DNP
R4
470E
D3
LED RED
R5
DNP
BZ2
DNP
VCC
OP1
OP2
SIP4
CN2