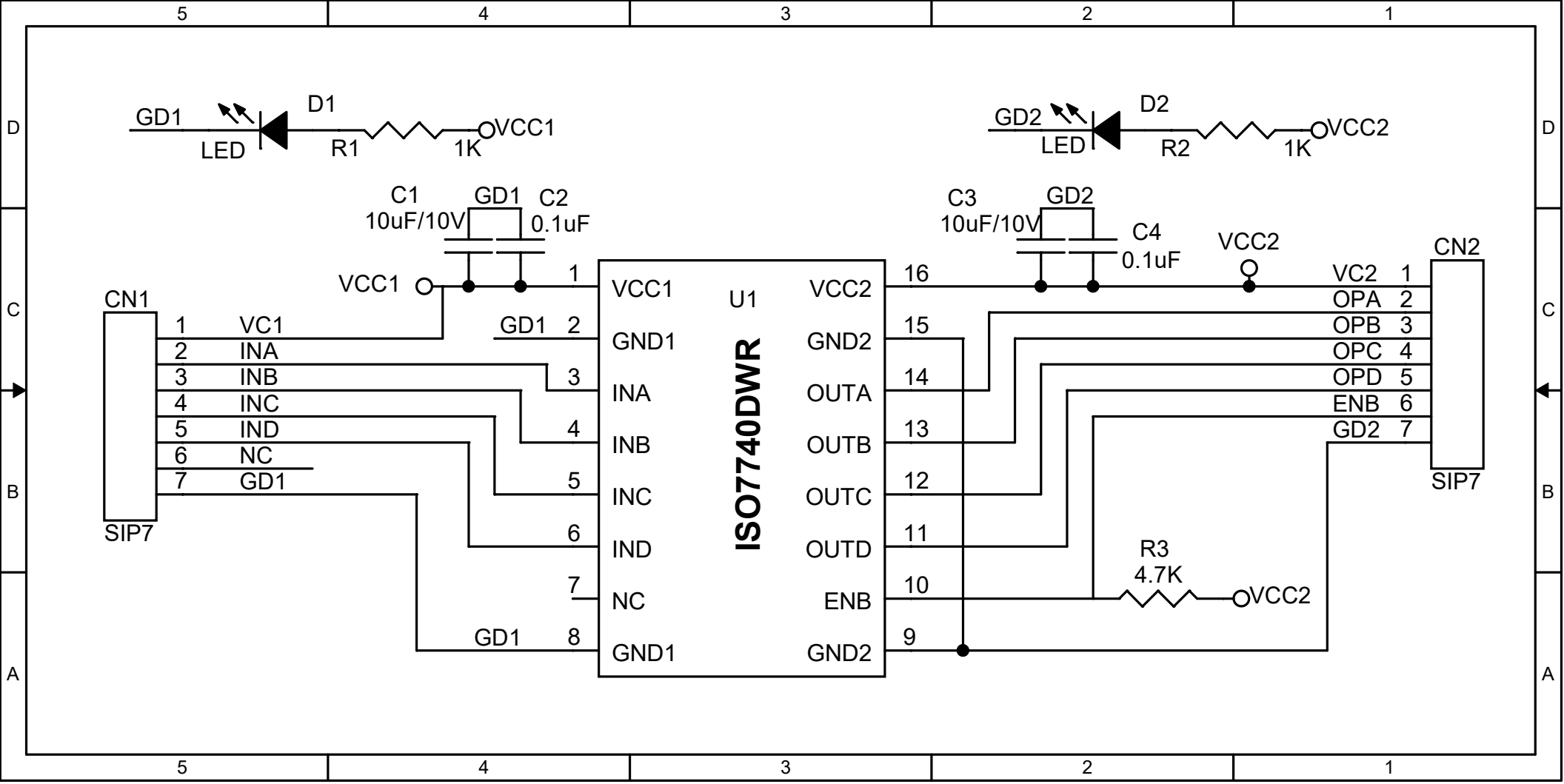
GD1
LED
D1
R1
1K
VCC1
GD2
LED
D2
R2
1K
VCC2
C1
10uF/10V
GD1
C2
0.1uF
C3
10uF/10V
GD2
C4
0.1uF
VCC2
CN1
SIP7
1 VC1
2 INA
3 INB
4 INC
5 IND
6 NC
7 GD1
VCC1
GD1
GD1
U1
ISO7740DWR
VCC1
GND1
INA
INB
INC
IND
NC
GND1
VCC2
GND2
OUTA
OUTB
OUTC
OUTD
ENB
GND2
R3
4.7K
VCC2
CN2
SIP7
VC2 1
OPA 2
OPB 3
OPC 4
OPD 5
ENB 6
GD2 7