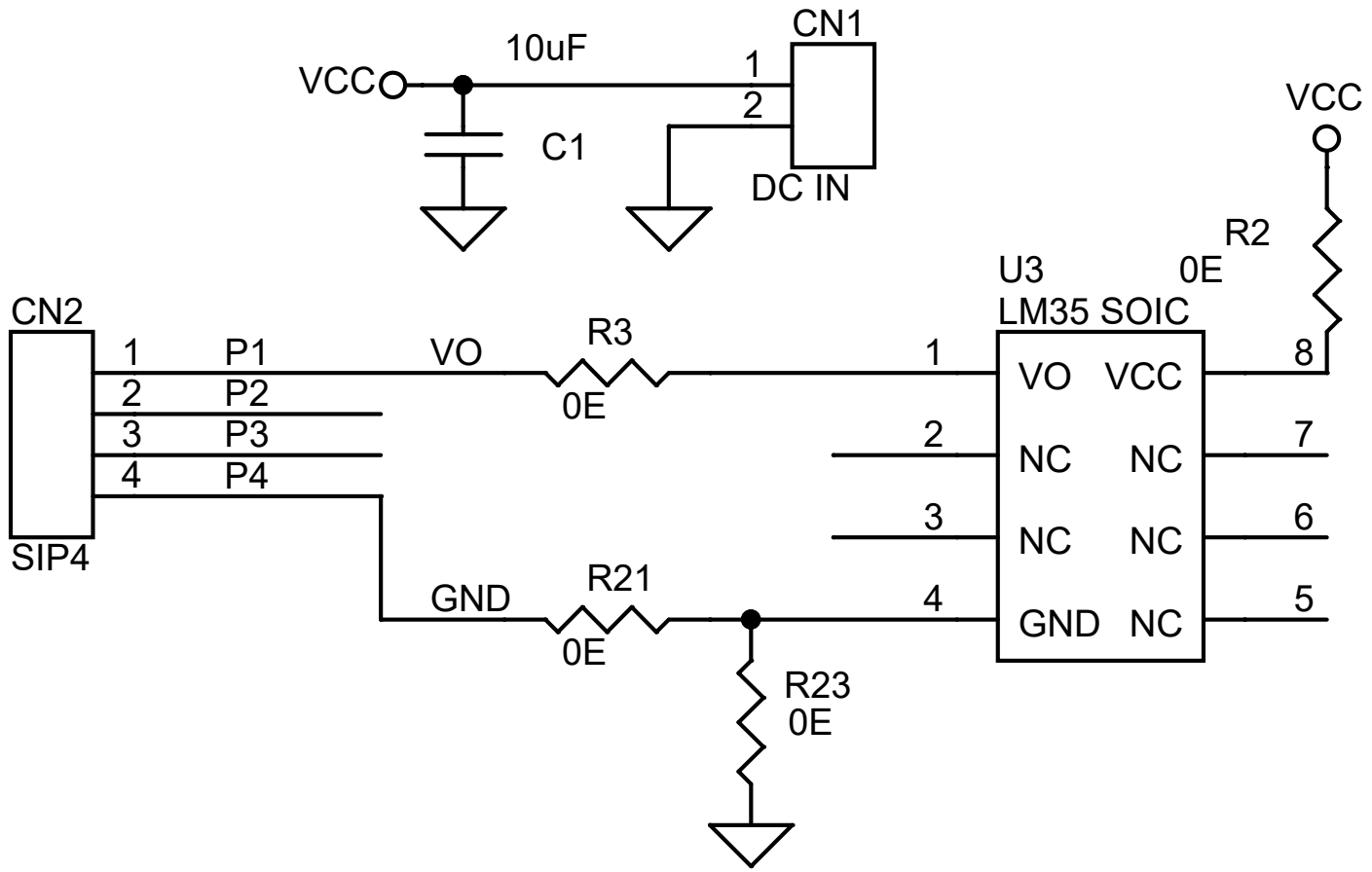

P1 = VO, P4 = GND, CN1=DC SUPPLY INPUT 5V DC

CAPACITOR C1=10uF/16V SMD SIZE 0805, RESISTOR R2, R3, R21, R23 = 0 OHMS SIZE 0805