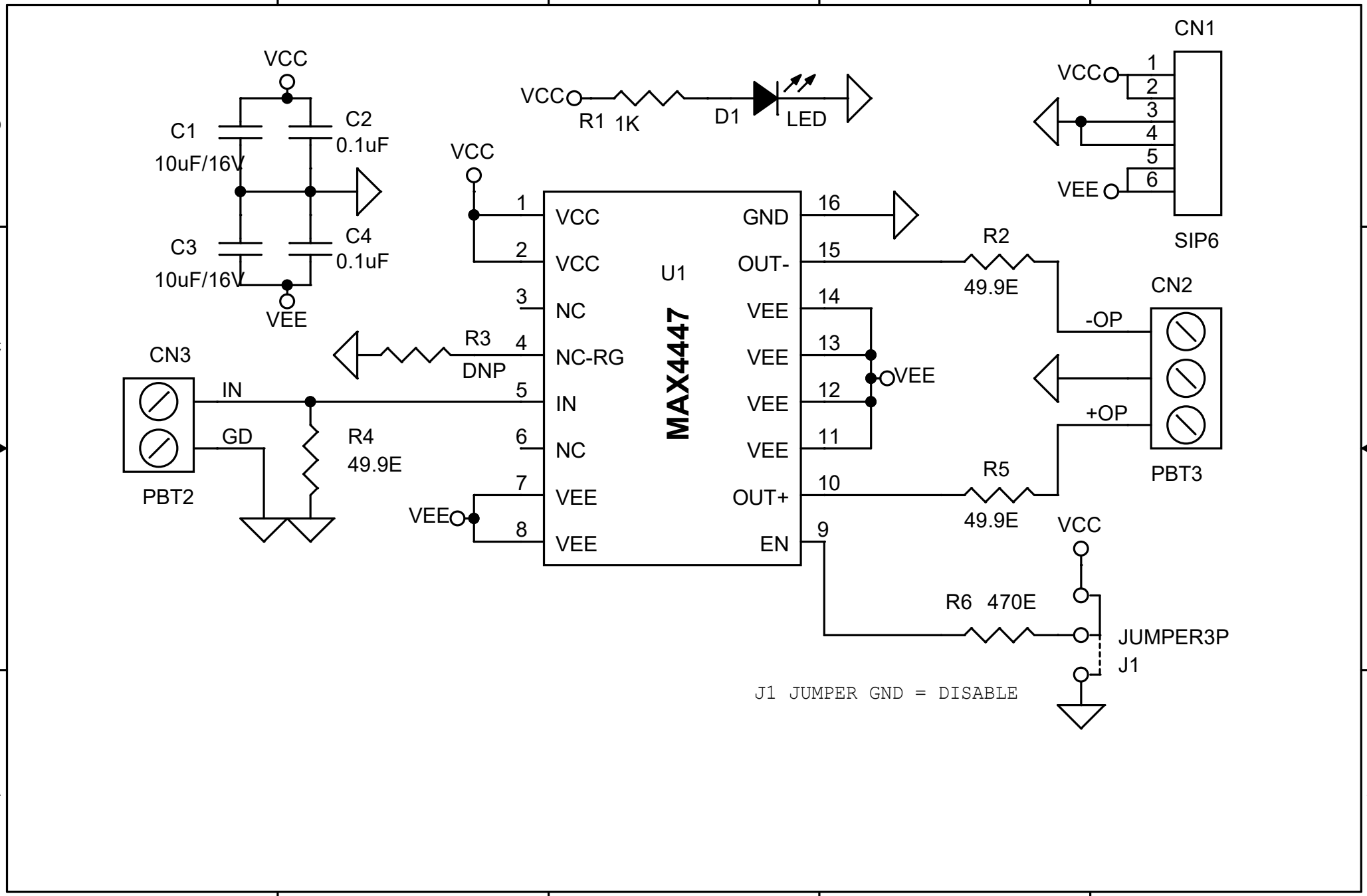
VCC
C1
10uF/16V
C2
0.1uF
C3
10uF/16V
C4
0.1uF
VEE
VCC
R1 1K
D1
LED
CN1
VCC
VEE
SIP6
VCC
U1
MAX4447
VCC
VCC
NC
NC-RG
IN
NC
VEE
VEE
GND
OUT-
VEE
VEE
VEE
VEE
OUT+
EN
R3
DNP
CN3
IN
GD
PBT2
R4
49.9E
VEE
R2
49.9E
CN2
-OP
+OP
PBT3
VEE
R5
49.9E
VCC
R6 470E
JUMPER3P
J1
J1 JUMPER GND = DISABLE