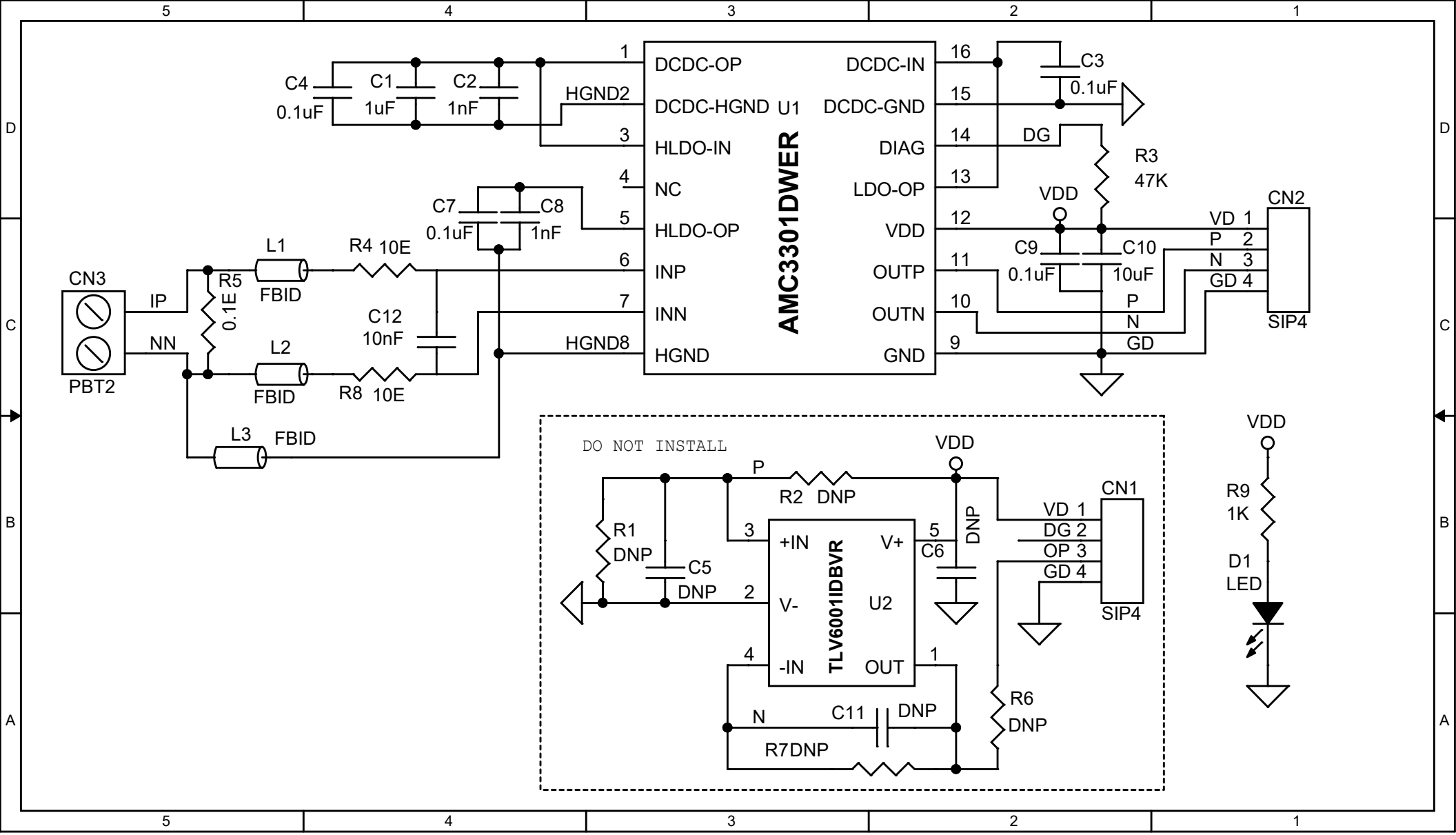
AMC3301DWER
U1
DCDC-OP
DCDC-HGND
HLDO-IN
NC
HLDO-OP
INP
INN
HGND
DCDC-IN
DCDC-GND
DIAG
LDO-OP
VDD
OUTP
OUTN
GND
HGND2
HGND8
C4
0.1uF
C1
1uF
C2
1nF
C3
0.1uF
C7
0.1uF
C8
1nF
C9
0.1uF
C10
10uF
C12
10nF
R3
47K
DG
VDD
CN2
VD 1
P 2
N 3
GD 4
SIP4
CN3
PBT2
IP
NN
R5
0.1E
L1
FBID
L2
FBID
L3
FBID
R4 10E
R8 10E
DO NOT INSTALL
R1
DNP
C5
DNP
R2 DNP
TLV6001IDBVR
+IN
V-
-IN
V+
OUT
U2
C6
DNP
CN1
SIP4
R6
DNP
C11
DNP
R7DNP
R9
1K
D1
LED