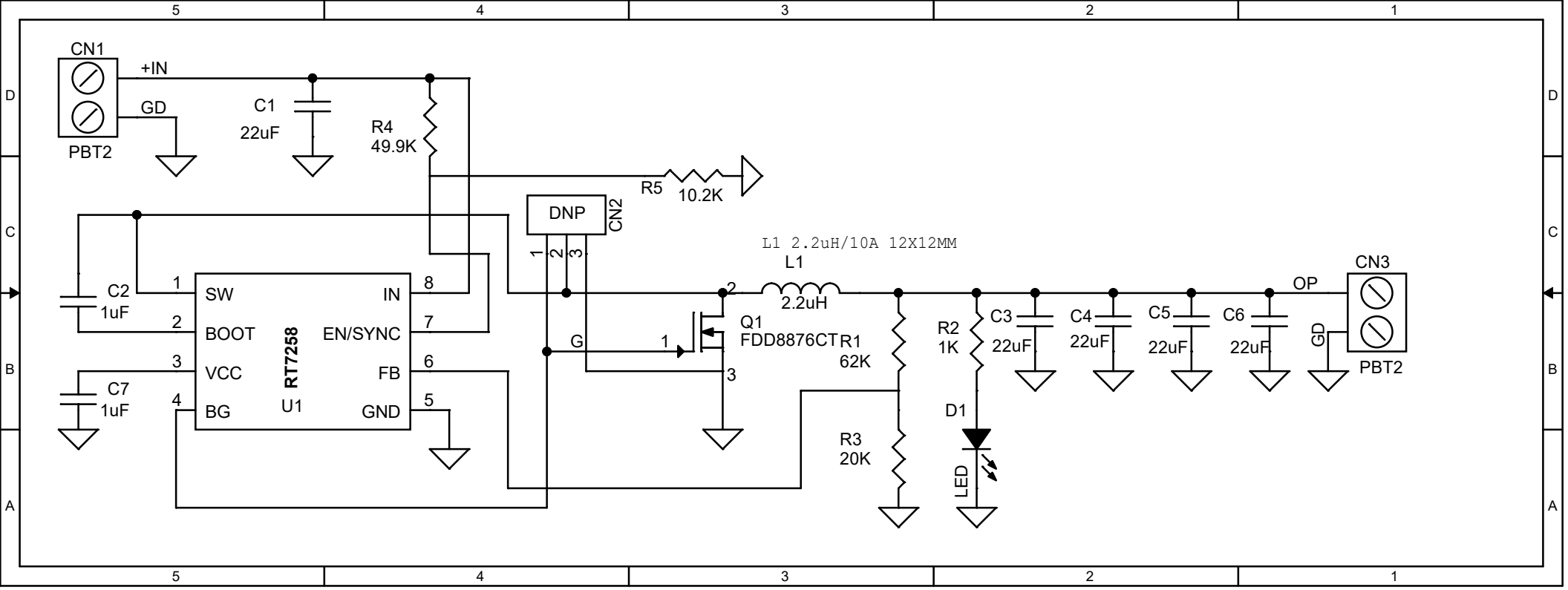
CN1
+IN
GD
PBT2
C1
22uF
R4
49.9K
R5
10.2K
DNP
CN2
1
2
3
L1 2.2uH/10A 12X12MM
L1
2.2uH
C2
1uF
C7
1uF
SW
BOOT
VCC
BG
RT7258
U1
IN
EN/SYNC
FB
GND
G
Q1
FDD8876CT
R1
62K
R2
1K
R3
20K
D1
LED
C3
22uF
C4
22uF
C5
22uF
C6
22uF
OP
GD
CN3
PBT2