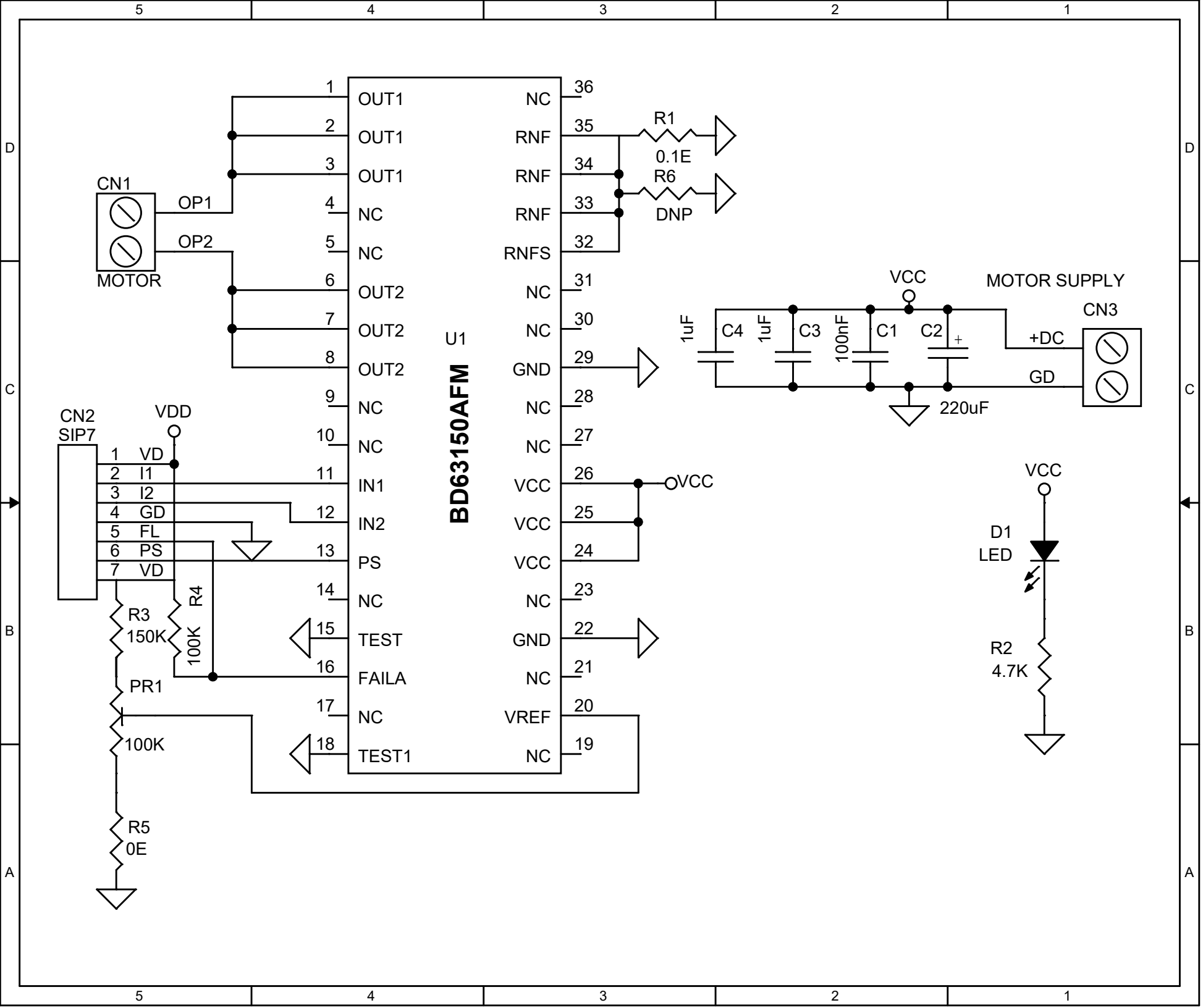
U1
BD63150AFM
1 OUT1
2 OUT1
3 OUT1
4 NC
5 NC
6 OUT2
7 OUT2
8 OUT2
9 NC
10 NC
11 IN1
12 IN2
13 PS
14 NC
15 TEST
16 FAILA
17 NC
18 TEST1
36 NC
35 RNF
34 RNF
33 RNF
32 RNFS
31 NC
30 NC
29 GND
28 NC
27 NC
26 VCC
25 VCC
24 VCC
23 NC
22 GND
21 NC
20 VREF
19 NC
CN1
OP1
OP2
MOTOR
R1
0.1E
R6
DNP
VCC
MOTOR SUPPLY
CN3
+DC
GD
C4 1uF
C3 1uF
C1 100nF
C2 220uF
CN2
SIP7
VDD
1 VD
2 I1
3 I2
4 GD
5 FL
6 PS
7 VD
R3
150K
R4
100K
PR1
100K
R5
0E
D1
LED
R2
4.7K