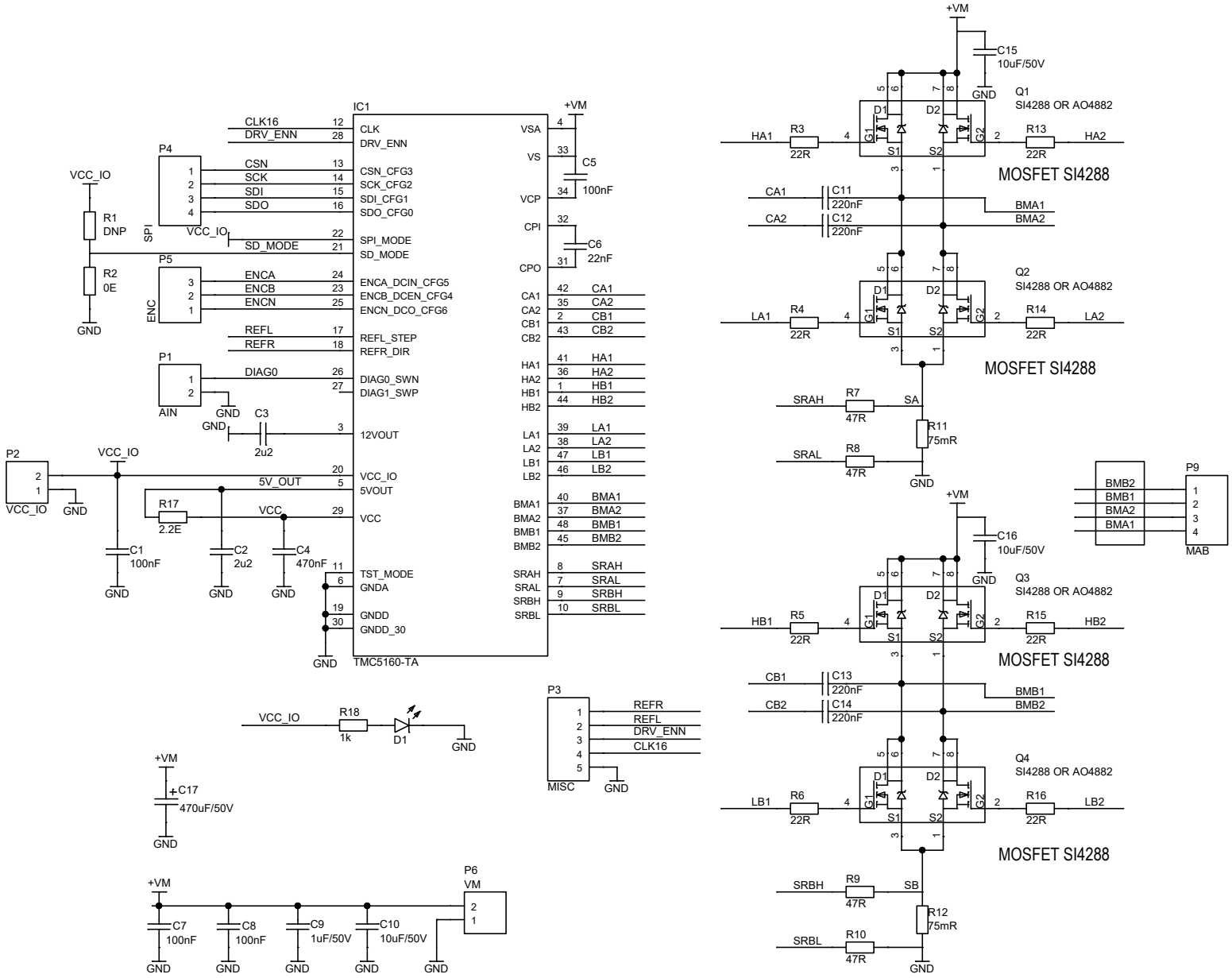
IC1
TMC5160-TA
CLK16
DRV_ENN
CSN
SCK
SDI
SDO
SD_MODE
ENCA
ENCB
ENCN
REFL
REFR
DIAG0
DIAG1_SWP
12VOUT
VCC_IO
5V_OUT
VCC
TST_MODE
GNDA
GNDD
GNDD_30
CLK
DRV_ENN
CSN_CFG3
SCK_CFG2
SDI_CFG1
SDO_CFG0
SPI_MODE
SD_MODE
ENCA_DCIN_CFG5
ENCB_DCEN_CFG4
ENCN_DCO_CFG6
REFL_STEP
REFR_DIR
DIAG0_SWN
DIAG1_SWP
VSA
VS
VCP
CPI
CPO
CA1
CA2
CB1
CB2
HA1
HA2
HB1
HB2
LA1
LA2
LB1
LB2
BMA1
BMA2
BMB1
BMB2
SRAH
SRAL
SRBH
SRBL
+VM
C5
100nF
C6
22nF
P4
SPI
P5
ENC
P1
AIN
P2
VCC_IO
R1
DNP
R2
0E
GND
C3
2u2
R17
2.2E
C1
100nF
C2
2u2
C4
470nF
R18
1k
D1
P3
MISC
REFR
REFL
DRV_ENN
CLK16
C17
470uF/50V
P6
VM
C7
100nF
C8
100nF
C9
1uF/50V
C10
10uF/50V
C15
10uF/50V
Q1
SI4288 OR AO4882
MOSFET SI4288
HA1
R3
22R
R13
HA2
CA1
C11
220nF
CA2
C12
220nF
BMA1
BMA2
Q2
SI4288 OR AO4882
LA1
R4
22R
R14
LA2
SRAH
R7
47R
SA
R11
75mR
SRAL
R8
47R
P9
MAB
BMB2
BMB1
BMA2
BMA1
C16
10uF/50V
Q3
SI4288 OR AO4882
HB1
R5
22R
R15
HB2
CB1
C13
220nF
CB2
C14
220nF
BMB1
BMB2
Q4
SI4288 OR AO4882
LB1
R6
22R
R16
LB2
SRBH
R9
47R
SB
R12
75mR
SRBL
R10
47R