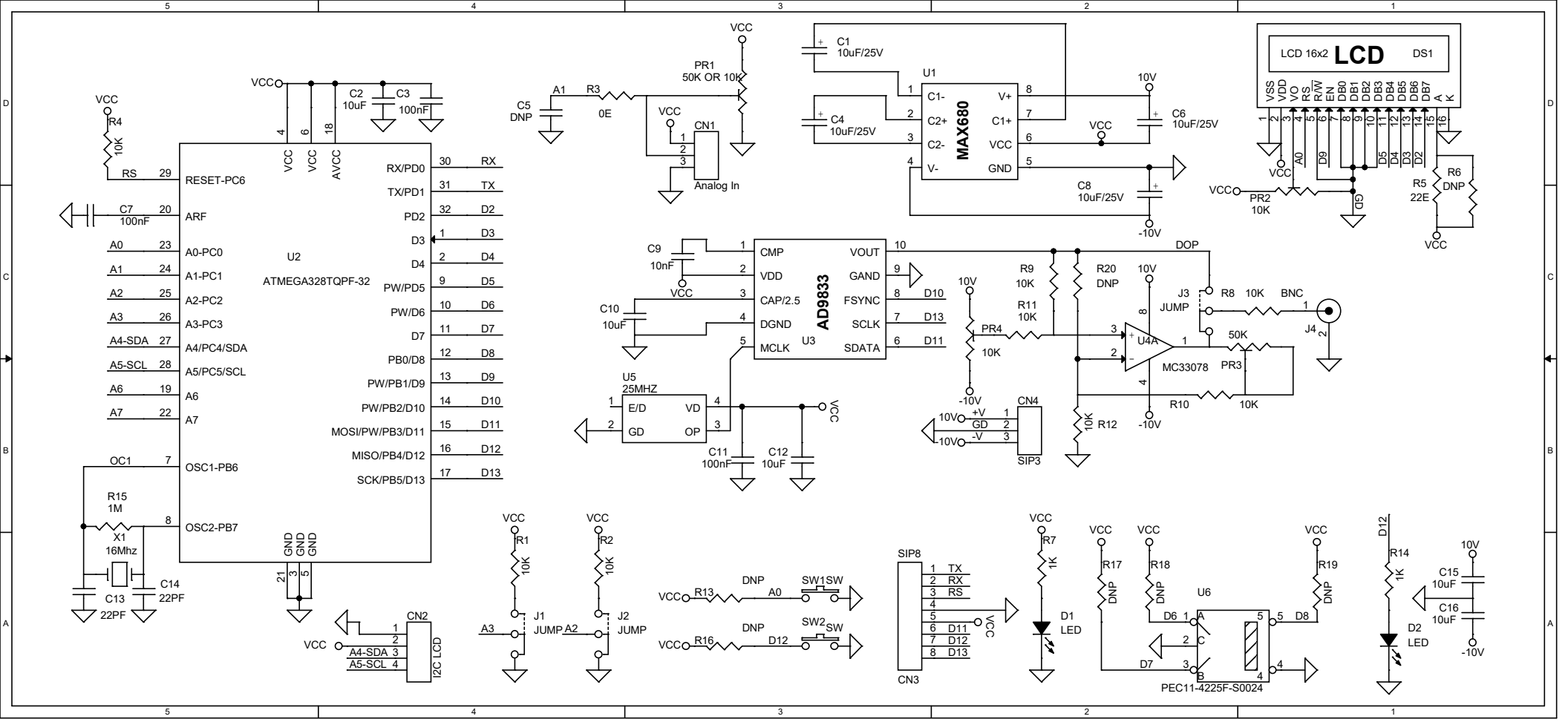
U2
ATMEGA328TQPF-32
RESET-PC6
ARF
A0-PC0
A1-PC1
A2-PC2
A3-PC3
A4/PC4/SDA
A5/PC5/SCL
A6
A7
OSC1-PB6
OSC2-PB7
RX/PD0
TX/PD1
PD2
PW/PD5
PW/D6
D7
PB0/D8
PW/PB1/D9
PW/PB2/D10
MOSI/PW/PB3/D11
MISO/PB4/D12
SCK/PB5/D13
VCC
AVCC
GND
R4 10K
C7 100nF
C2 10uF
C3 100nF
X1 16Mhz
C13 22PF
C14 22PF
R15 1M
CN2
I2C LCD
A4-SDA
A5-SCL
C5 DNP
R3 0E
PR1 50K OR 10K
CN1
Analog In
U1
MAX680
C1-
C2+
C2-
V-
V+
C1+
VCC
GND
C1 10uF/25V
C4 10uF/25V
C6 10uF/25V
C8 10uF/25V
10V
-10V
LCD 16x2 LCD DS1
VSS
VDD
VO
RS
R/W
EN
DB0
DB1
DB2
DB3
DB4
DB5
DB6
DB7
A
K
PR2 10K
R5 22E
R6 DNP
U3
AD9833
CMP
VDD
CAP/2.5
DGND
MCLK
VOUT
GAND
FSYNC
SCLK
SDATA
C9 10nF
C10 10uF
C11 100nF
C12 10uF
U5 25MHZ
E/D
GD
VD
OP
PR4 10K
R9 10K
R11 10K
R20 DNP
R12 10K
CN4
SIP3
+V
-V
U4A
MC33078
DOP
J3 JUMP
R8 10K
BNC
J4
50K
PR3
R10 10K
R1 10K
R2 10K
J1 JUMP
J2 JUMP
A3
A2
R13 DNP
R16 DNP
A0
D12
SW1 SW
SW2 SW
SIP8
CN3
TX
RX
RS
D11
D12
D13
R7 1K
D1 LED
R17 DNP
R18 DNP
R19 DNP
U6
PEC11-4225F-S0024
D6
D7
D8
D12
R14 1K
D2 LED
C15 10uF
C16 10uF