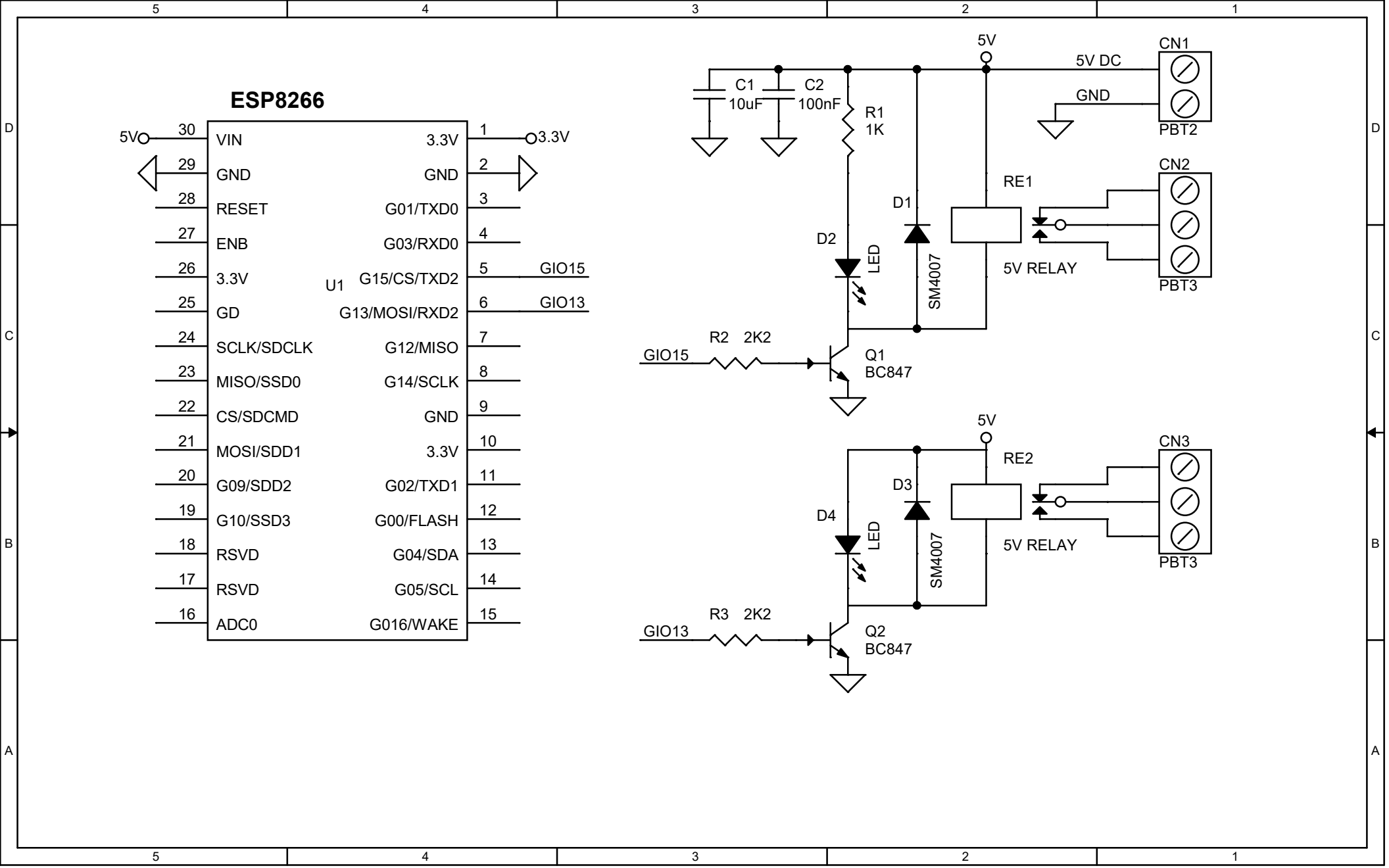
ESP8266
U1
5V
30 VIN
29 GND
28 RESET
27 ENB
26 3.3V
25 GD
24 SCLK/SDCLK
23 MISO/SSD0
22 CS/SDCMD
21 MOSI/SDD1
20 G09/SDD2
19 G10/SSD3
18 RSVD
17 RSVD
16 ADC0
1 3.3V
2 GND
3 G01/TXD0
4 G03/RXD0
5 G15/CS/TXD2
6 G13/MOSI/RXD2
7 G12/MISO
8 G14/SCLK
9 GND
10 3.3V
11 G02/TXD1
12 G00/FLASH
13 G04/SDA
14 G05/SCL
15 G016/WAKE
3.3V
GIO15
GIO13
C1
10uF
C2
100nF
R1
1K
5V
5V DC
GND
CN1
PBT2
CN2
PBT3
RE1
5V RELAY
D1
SM4007
D2
LED
R2 2K2
GIO15
Q1
BC847
5V
RE2
CN3
PBT3
D3
SM4007
D4
LED
5V RELAY
R3 2K2
GIO13
Q2
BC847