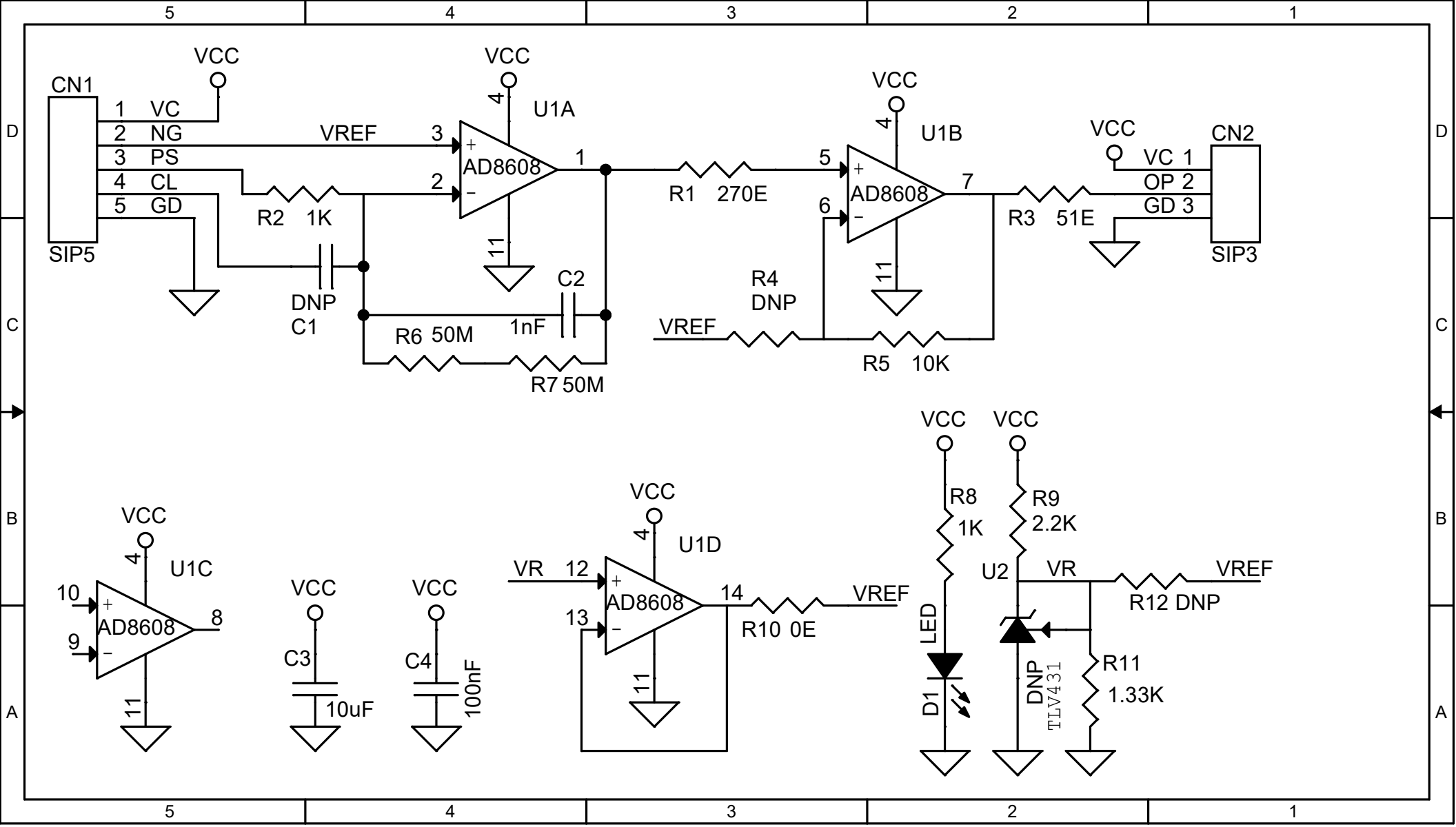
CN1
SIP5
1 VC
2 NG
3 PS
4 CL
5 GD
VCC
VREF
R2 1K
DNP
C1
U1A
AD8608
R6 50M
C2
1nF
R7 50M
R1 270E
U1B
R4
DNP
R5 10K
R3 51E
CN2
SIP3
VC 1
OP 2
GD 3
U1C
U1D
R10 0E
C3
10uF
C4
100nF
R8
1K
R9
2.2K
LED
D1
U2
TLV431
DNP
R11
1.33K
R12 DNP