QUAD DIFFERENTIAL COMPARATORS

Check for Samples: LM139, LM239, LM339, LM139A, LM239A, LM339A, LM2901, LM2901AV, LM2901V

FEATURES

- **Wide Supply Ranges**
  - **Single Supply: 2 V to 36 V (Tested to 30 V for Non-V Devices and 32 V for V-Suffix Devices)**
  - **Dual Supplies: ±1 V to ±18 V (Tested to ±15 V for Non-V Devices and ±16 V for V-Suffix Devices)**
- **Low Supply-Current Drain Independent of Supply Voltage: 0.8 mA (Typ)**
- **Low Input Bias Current: 25 nA (Typ)**
- **Low Input Offset Current: 3 nA (Typ) (LM139)**
- **Low Input Offset Voltage: 2 mV (Typ)**
- **Common-Mode Input Voltage Range Includes Ground**
- **Differential Input Voltage Range Equal to Maximum-Rated Supply Voltage: ±36 V**
- **Low Output Saturation Voltage**
- **Output Compatible With TTL, MOS, and CMOS**

LM139, LM139A . . . D, J, OR W PACKAGE
LM239 . . . D, N, OR PW PACKAGE
LM239A . . . D PACKAGE
LM339, LM339A . . . D, DB, N, NS, OR PW PACKAGE
LM2901 . . . D, N, NS, OR PW PACKAGE
(TOP VIEW)

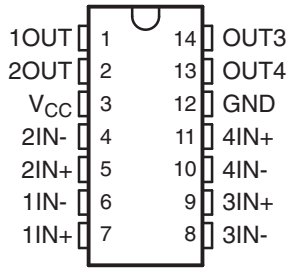

LM139, LM139A . . . FK PACKAGE
(TOP VIEW)

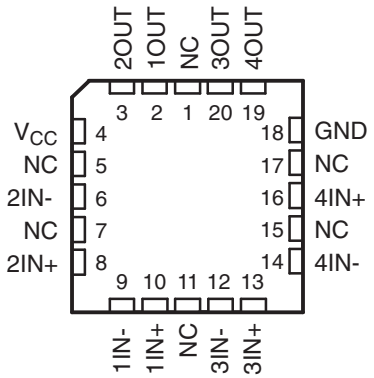

NC - No inter nal connection

DESCRIPTION/ORDERING INFORMATION

These devices consist of four independent voltage comparators that are designed to operate from a single power supply over a wide range of voltages. Operation from dual supplies also is possible, as long as the difference between the two supplies is 2 V to 36 V, and V_{CC} is at least 1.5 V more positive than the input common-mode voltage. Current drain is independent of the supply voltage. The outputs can be connected to other open-collector outputs to achieve wired-AND relationships.

The LM139 and LM139A are characterized for operation over the full military temperature range of –55°C to 125°C. The LM239 and LM239A are characterized for operation from –25°C to 125°C. The LM339 and LM339A are characterized for operation from 0°C to 70°C. The LM2901, LM2901AV, and LM2901V are characterized for operation from –40°C to 125°C.

Please be aware that an important notice concerning availability, standard warranty, and use in critical applications of Texas Instruments semiconductor products and disclaimers thereto appears at the end of this data sheet.

PRODUCTION DATA information is current as of publication date. Products conform to specifications per the terms of the Texas Instruments standard warranty. Production processing does not necessarily include testing of all parameters.

Copyright © 1979–2010, Texas Instruments Incorporated
On products compliant to MIL-PRF-38535, all parameters are tested unless otherwise noted. On all other products, production processing does not necessarily include testing of all parameters.

Table 1. ORDERING INFORMATION[(1)]

T_A	V_{IO}max AT 25°C	MAX V_{CC}	PACKAGE[(2)]		ORDERABLE PART NUMBER	TOP-SIDE MARKING
0°C to 70°C	5 mV	30 V	PDIP – N	Tube of 25	LM339N	LM339N
			SOIC – D	Tube of 50	LM339D	LM339
				Reel of 2500	LM339DR	
					LM339DRG3	
			SOP – NS	Reel of 2000	LM339NSR	LM339
			SSOP – DB	Reel of 2000	LM339DBR	LM339
			TSSOP – PW	Tube of 90	LM339PW	L339
				Reel of 2000	LM339PWR	
	2 mV	30 V	PDIP – N	Tube of 25	LM339AN	LM339AN
			SOIC – D	Tube of 50	LM339AD	LM339A
				Reel of 2500	LM339ADR	
			SOP – NS	Reel of 2000	LM339ANSR	LM339A
			SSOP – DB	Reel of 2000	LM339ADBR	L339A
			TSSOP – PW	Tube of 90	LM339APW	L339A
				Reel of 2000	LM339APWR	
–25°C to 85°C	5 mV	30 V	PDIP – N	Tube of 25	LM239N	LM239N
			SOIC – D	Tube of 50	LM239D	LM239
				Reel of 2500	LM239DR	
					LM239DRG3	
			TSSOP – PW	Tube of 90	LM239PW	L239
				Reel of 2000	LM239PWR	
	2 mV	30 V	SOIC – D	Tube of 50	LM239AD	LM239A
				Reel of 2500	LM239ADR	
–40°C to 125°C	7 mV	30 V	PDIP – N	Tube of 25	LM2901N	LM2901N
			SOIC – D	Tube of 50	LM2901D	LM2901
				Reel of 2500	LM2901DR	
			SOP – NS	Reel of 2000	LM2901NSR	LM2901
			TSSOP – PW	Tube of 90	LM2901PW	L2901
				Reel of 2000	LM2901PWR	
	7 mV	32 V	SOIC – D	Reel of 2500	LM2901VQDR	L2901V
			TSSOP – PW	Reel of 2000	LM2901VQPWR	L2901V
	2 mV	32 V	SOIC – D	Reel of 2500	LM2901AVQDR	L2901AV
			TSSOP – PW	Reel of 2000	LM2901AVQPWR	L2901AV
–55°C to 125°C	5 mV	30 V	CFP – W	Tube of 25	LM139W	LM139W
			CDIP – J	Tube of 25	LM139J	LM139J
			LCCC – FK	Tube of 55	LM139FK	LM139FK
			SOIC – D	Tube of 50	LM139D	LM139D
				Reel of 2500	LM139DR	
	2 mV	30 V	CFP – W	Tube of 25	LM139AW	LM139AW
			CDIP – J	Tube of 25	LM139AJ	LM139AJ
			LCCC – FK	Tube of 55	LM139AFK	LM139AFK
			SOIC – D	Tube of 50	LM139AD	LM139AD
				Reel of 2500	LM139ADR	

(1) For the most current package and ordering information, see the Package Option Addendum at the end of this document, or see the TI web site at www.ti.com.
(2) Package drawings, thermal data, and symbolization are available at www.ti.com/packaging.

Copyright © 1979–2010, Texas Instruments Incorporated

SYMBOL (EACH COMPARATOR)

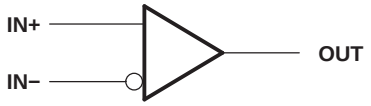

SCHEMATIC (EACH COMPARATOR)

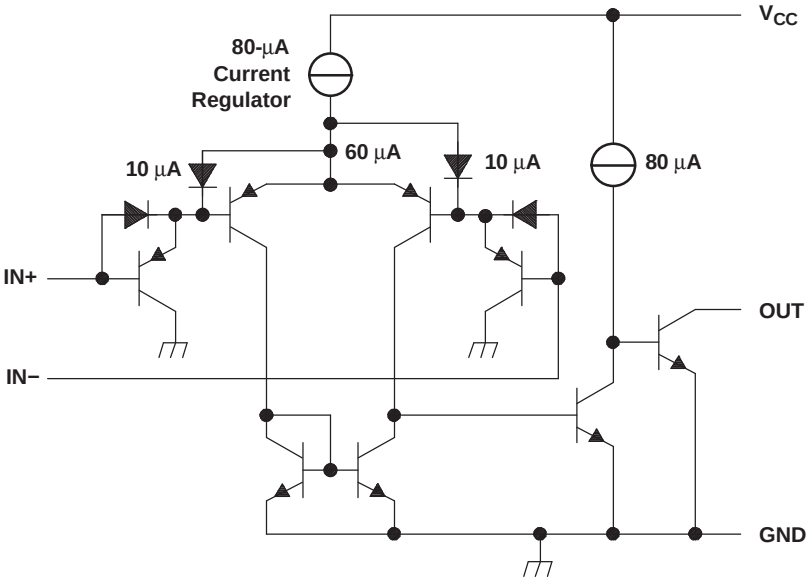

All current values shown are nominal.

ABSOLUTE MAXIMUM RATINGS[1]

over operating free-air temperature range (unless otherwise noted)

			MIN	MAX	UNIT
V_{CC}	Supply voltage[2]			36	V
V_{ID}	Differential input voltage[3]			±36	V
V_I	Input voltage range (either input)		–0.3	36	V
V_O	Output voltage			36	V
I_O	Output current			20	mA
	Duration of output short circuit to ground[4]			Unlimited	
θ_{JA}	Package thermal impedance, junction to free air[5] [6]	D package		86	°C/W
		DB package		96	
		N package		80	
		NS package		76	
		PW package		113	
θ_{JC}	Package thermal impedance, junction to case[7] [8]	FK package		5.61	°C/W
		J package		15.05	
		W package		14.65	
T_J	Operating virtual-junction temperature			150	°C
	Case temperature for 60 s	FK package		260	°C
	Lead temperature 1,6 mm (1/16 in) from case for 60 s	J package		300	°C
T_{stg}	Storage temperature range		–65	150	°C

(1) Stresses beyond those listed under "absolute maximum ratings" may cause permanent damage to the device. These are stress ratings only, and functional operation of the device at these or any other conditions beyond those indicated under "recommended operating conditions" is not implied. Exposure to absolute-maximum-rated conditions for extended periods may affect device reliability.
(2) All voltage values, except differential voltages, are with respect to network ground.
(3) Differential voltages are at IN+ with respect to IN–.
(4) Short circuits from outputs to V_{CC} can cause excessive heating and eventual destruction.
(5) Maximum power dissipation is a function of T_J (max), θ_{JA}, and T_A. The maximum allowable power dissipation at any allowable ambient temperature is $P_D = (T_J (max) – T_A)/\theta_{JA}$. Operating at the absolute maximum T_J of 150°C can affect reliability.
(6) The package thermal impedance is calculated in accordance with JESD 51-7.
(7) Maximum power dissipation is a function of T_J (max), θ_{JC}, and T_C. The maximum allowable power dissipation at any allowable case temperature is $P_D = (T_J (max) – T_C)/\theta_{JC}$. Operating at the absolute maximum T_J of 150°C can affect reliability.
(8) The package thermal impedance is calculated in accordance with MIL-STD-883.

Copyright © 1979–2010, Texas Instruments Incorporated

ELECTRICAL CHARACTERISTICS

at specified free-air temperature, V_{CC} = 5 V (unless otherwise noted)

PARAMETER		TEST CONDITIONS(1)		T_A (2)	LM139			LM139A			UNIT
					MIN	TYP	MAX	MIN	TYP	MAX	
V_{IO}	Input offset voltage	V_{CC} = 5 V to 30 V, V_{IC} = V_{ICR} min, V_O = 1.4 V		25°C		2	5		1	2	mV
				Full range			9			4	
I_{IO}	Input offset current	V_O = 1.4 V		25°C		3	25		3	25	nA
				Full range			100			100	
I_{IB}	Input bias current	V_O = 1.4 V		25°C		–25	–100		–25	–100	nA
				Full range			–300			–300	
V_{ICR}	Common-mode input-voltage range(3)			25°C	0 to V_{CC} – 1.5			0 to V_{CC} – 1.5			V
				Full range	0 to V_{CC} – 2			0 to V_{CC} – 2			
A_{VD}	Large-signal differential-voltage amplification	V_{CC+} = ±7.5 V, V_O = –5 V to 5 V		25°C		200		50	200		V/mV
I_{OH}	High-level output current	V_{ID} = 1 V	V_{OH} = 5 V	25°C		0.1			0.1		nA
			V_{OH} = 30 V	Full range			1			1	μA
V_{OL}	Low-level output voltage	V_{ID} = –1 V,	I_{OL} = 4 mA	25°C		150	400		150	400	mV
				Full range			700			700	
I_{OL}	Low-level output current	V_{ID} = –1 V,	V_{OL} = 1.5 V	25°C	6	16		6	16		mA
I_{CC}	Supply current (four comparators)	V_O = 2.5 V,	No load	25°C		0.8	2		0.8	2	mA

(1) All characteristics are measured with zero common-mode input voltage, unless otherwise specified.
(2) Full range (MIN to MAX) for LM139 and LM139A is –55°C to 125°C. All characteristics are measured with zero common-mode input voltage, unless otherwise specified.
(3) The voltage at either input or common-mode should not be allowed to go negative by more than 0.3 V. The upper end of the common-mode voltage range is V_{CC+} – 1.5 V; however, one input can exceed V_{CC}, and the comparator will provide a proper output state as long as the other input remains in the common-mode range. Either or both inputs can go to 30 V without damage.

SWITCHING CHARACTERISTICS

V_{CC} = 5 V, T_A = 25°C

PARAMETER	TEST CONDITIONS		LM139 LM139A	UNIT
			TYP	
Response time	R_L connected to 5 V through 5.1 kΩ, C_L = 15 pF(1) (2)	100-mV input step with 5-mV overdrive	1.3	μs
		TTL-level input step	0.3	

(1) C_L includes probe and jig capacitance.
(2) The response time specified is the interval between the input step function and the instant when the output crosses 1.4 V.

Copyright © 1979–2010, Texas Instruments Incorporated

ELECTRICAL CHARACTERISTICS

at specified free-air temperature, V_{CC} = 5 V (unless otherwise noted)

PARAMETER		TEST CONDITIONS(1)		T_A (2)	LM239 LM339			LM239A LM339A			UNIT
					MIN	TYP	MAX	MIN	TYP	MAX	
V_{IO}	Input offset voltage	V_{CC} = 5 V to 30 V, V_{IC} = V_{ICR} min, V_O = 1.4 V		25°C		2	5		1	3	mV
				Full range			9			4	
I_{IO}	Input offset current	V_O = 1.4 V		25°C		5	50		5	50	nA
				Full range			150			150	
I_{IB}	Input bias current	V_O = 1.4 V		25°C		–25	–250		–25	–250	nA
				Full range			–400			–400	
V_{ICR}	Common-mode input-voltage range(3)			25°C	0 to V_{CC} – 1.5			0 to V_{CC} – 1.5			V
				Full range	0 to V_{CC} – 2			0 to V_{CC} – 2			
A_{VD}	Large-signal differential-voltage amplification	V_{CC} = 15 V, V_O = 1.4 V to 11.4 V, R_L ≥ 15 kΩ to V_{CC}		25°C	50	200		50	200		V/mV
I_{OH}	High-level output current	V_{ID} = 1 V	V_{OH} = 5 V	25°C		0.1	50		0.1	50	nA
			V_{OH} = 30 V	Full range			1			1	µA
V_{OL}	Low-level output voltage	V_{ID} = –1 V,	I_{OL} = 4 mA	25°C		150	400		150	400	mV
				Full range			700			700	
I_{OL}	Low-level output current	V_{ID} = –1 V,	V_{OL} = 1.5 V	25°C	6	16		6	16		mA
I_{CC}	Supply current (four comparators)	V_O = 2.5 V,	No load	25°C		0.8	2		0.8	2	mA

(1) All characteristics are measured with zero common-mode input voltage, unless otherwise specified.
(2) Full range (MIN to MAX) for LM239/LM239A is –25°C to 85°C, and for LM339/LM339A is 0°C to 70°C. All characteristics are measured with zero common-mode input voltage, unless otherwise specified.
(3) The voltage at either input or common-mode should not be allowed to go negative by more than 0.3 V. The upper end of the common-mode voltage range is V_{CC+} – 1.5 V; however, one input can exceed V_{CC}, and the comparator will provide a proper output state as long as the other input remains in the common-mode range. Either or both inputs can go to 30 V without damage.

SWITCHING CHARACTERISTICS

V_{CC} = 5 V, T_A = 25°C

PARAMETER	TEST CONDITIONS		LM239 LM239A LM339 LM339A	UNIT
			TYP	
Response time	R_L connected to 5 V through 5.1 kΩ, C_L = 15 pF(1) (2)	100-mV input step with 5-mV overdrive	1.3	µs
		TTL-level input step	0.3	

(1) C_L includes probe and jig capacitance.
(2) The response time specified is the interval between the input step function and the instant when the output crosses 1.4 V.

Copyright © 1979–2010, Texas Instruments Incorporated

ELECTRICAL CHARACTERISTICS

at specified free-air temperature, V_{CC} = 5 V (unless otherwise noted)

PARAMETER		TEST CONDITIONS(1)		T_A (2)	LM2901 MIN	LM2901 TYP	LM2901 MAX	UNIT
V_{IO}	Input offset voltage	$V_{IC} = V_{ICR}$ min, V_O = 1.4 V, V_{CC} = 5 V to MAX(3)	Non-A devices	25°C		2	7	mV
				Full range			15	
			A-suffix devices	25°C		1	2	
				Full range			4	
I_{IO}	Input offset current	V_O = 1.4 V		25°C		5	50	nA
				Full range			200	
I_{IB}	Input bias current	V_O = 1.4 V		25°C		–25	–250	nA
				Full range			–500	
V_{ICR}	Common-mode input-voltage range(4)			25°C	0 to V_{CC} – 1.5			V
				Full range	0 to V_{CC} – 2			
A_{VD}	Large-signal differential-voltage amplification	V_{CC} = 15 V, V_O = 1.4 V to 11.4 V, R_L ≥ 15 kΩ to V_{CC}		25°C	25	100		V/mV
I_{OH}	High-level output current	V_{ID} = 1 V	V_{OH} = 5 V	25°C		0.1	50	nA
			$V_{OH} = V_{CC}$ MAX(3)	Full range			1	μA
V_{OL}	Low-level output voltage	V_{ID} = –1 V, I_{OL} = 4 mA	Non-V devices	25°C		150	500	mV
			V-suffix devices			150	400	
			All devices	Full range			700	
I_{OL}	Low-level output current	V_{ID} = –1 V,	V_{OL} = 1.5 V	25°C	6	16		mA
I_{CC}	Supply current (four comparators)	V_O = 2.5 V, No load	V_{CC} = 5 V	25°C		0.8	2	mA
			V_{CC} = MAX(3)			1	2.5	

(1) All characteristics are measured with zero common-mode input voltage, unless otherwise specified.
(2) Full range (MIN to MAX) for LM2901 is –40°C to 125°C. All characteristics are measured with zero common-mode input voltage, unless otherwise specified.
(3) V_{CC} MAX = 30 V for non-V devices, and 32 V for V-suffix devices
(4) The voltage at either input or common-mode should not be allowed to go negative by more than 0.3 V. The upper end of the common-mode voltage range is V_{CC+} – 1.5 V; however, one input can exceed V_{CC}, and the comparator will provide a proper output state as long as the other input remains in the common-mode range. Either or both inputs can go to V_{CC} MAX without damage.

SWITCHING CHARACTERISTICS

V_{CC} = 5 V, T_A = 25°C

PARAMETER	TEST CONDITIONS		LM2901 TYP	UNIT
Response time	R_L connected to 5 V through 5.1 kΩ, C_L = 15 pF(1) (2)	100-mV input step with 5-mV overdrive	1.3	μs
		TTL-level input step	0.3	

(1) C_L includes probe and jig capacitance.
(2) The response time specified is the interval between the input step function and the instant when the output crosses 1.4 V.

Copyright © 1979–2010, Texas Instruments Incorporated

TYPICAL CHARACTERISTICS

SUPPLY CURRENT vs SUPPLY VOLTAGE

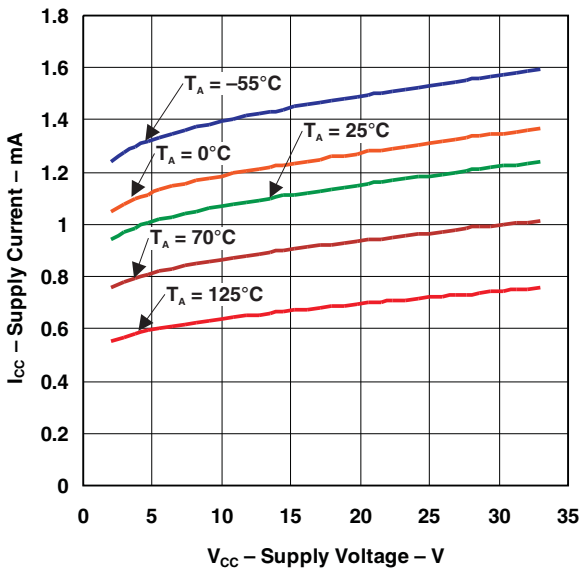

INPUT BIAS CURRENT vs SUPPLY VOLTAGE

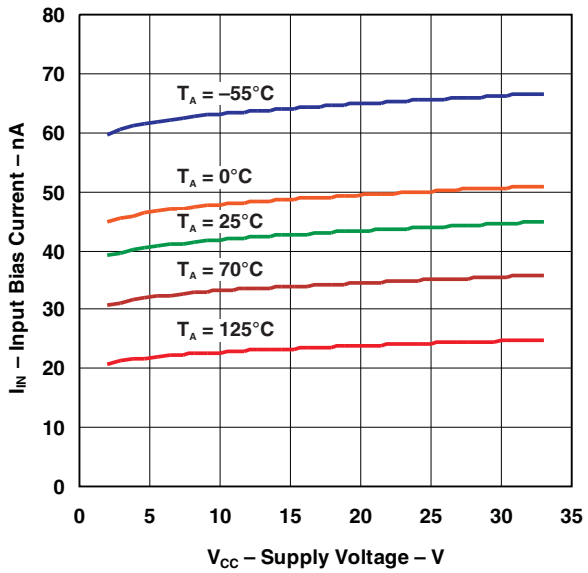

OUTPUT SATURATION VOLTAGE

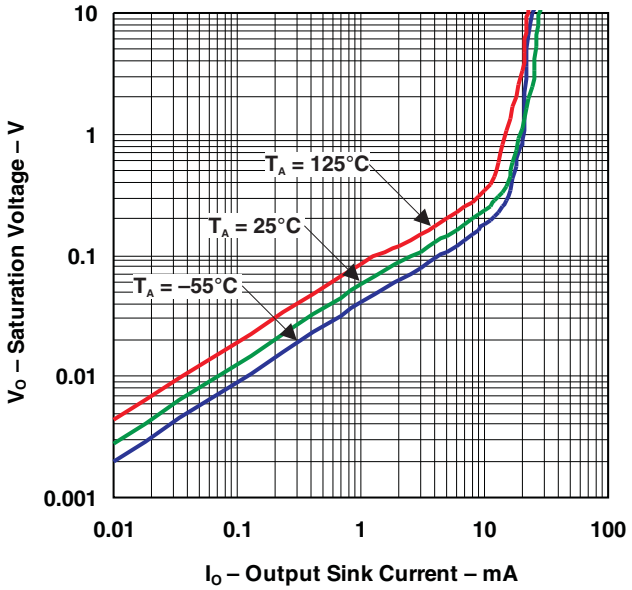

Copyright © 1979–2010, Texas Instruments Incorporated

TYPICAL CHARACTERISTICS (continued)

RESPONSE TIME FOR VARIOUS OVERDRIVES NEGATIVE TRANSITION

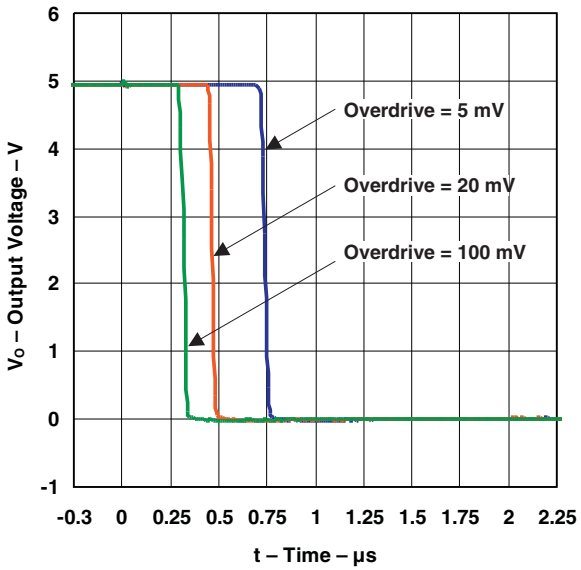

RESPONSE TIME FOR VARIOUS OVERDRIVES POSITIVE TRANSITION

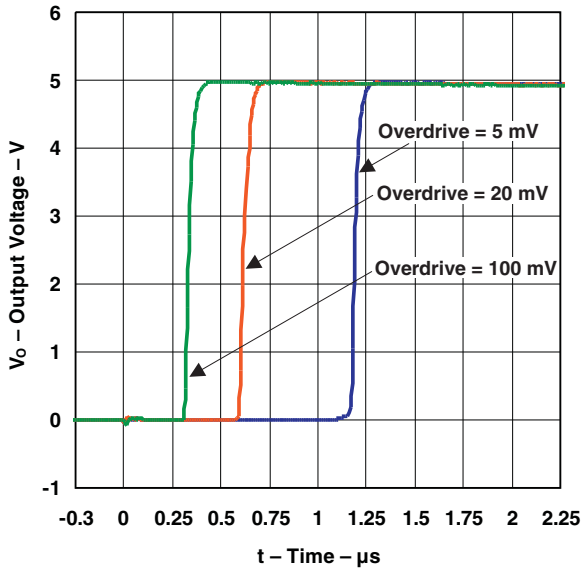

PACKAGING INFORMATION

Orderable Device	Status (1)	Package Type	Package Drawing	Pins	Package Qty	Eco Plan (2)	Lead/ Ball Finish	MSL Peak Temp (3)	Samples (Requires Login)
5962-7700801VCA	ACTIVE	CDIP	J	14	1	TBD	A42	N / A for Pkg Type	
5962-87739012A	ACTIVE	LCCC	FK	20	1	TBD	Call TI	Call TI	
5962-8773901CA	ACTIVE	CDIP	J	14	1	TBD	Call TI	Call TI	
5962-8773901DA	ACTIVE	CFP	W	14	1	TBD	Call TI	Call TI	
5962-9673802V9B	ACTIVE	XCEPT	KGD	0	1	TBD	Call TI	N / A for Pkg Type	
5962-9673802VCA	ACTIVE	CDIP	J	14	1	TBD	A42	N / A for Pkg Type	
77008012A	ACTIVE	LCCC	FK	20	1	TBD	Call TI	Call TI	
7700801CA	ACTIVE	CDIP	J	14	1	TBD	Call TI	Call TI	
7700801DA	ACTIVE	CFP	W	14	1	TBD	Call TI	Call TI	
JM38510/11201BCA	ACTIVE	CDIP	J	14	1	TBD	A42	N / A for Pkg Type	
LM139AD	ACTIVE	SOIC	D	14	50	TBD	CU NIPDAU	Level-3-245C-168 HR	
LM139ADG4	ACTIVE	SOIC	D	14	50	Green (RoHS & no Sb/Br)	CU NIPDAU	Level-1-260C-UNLIM	
LM139ADR	ACTIVE	SOIC	D	14	2500	Pb-Free (RoHS)	CU NIPDAU	Level-2-250C-1 YEAR/ Level-1-235C-UNLIM	
LM139ADRG4	ACTIVE	SOIC	D	14	2500	Green (RoHS & no Sb/Br)	CU NIPDAU	Level-1-260C-UNLIM	
LM139AFKB	ACTIVE	LCCC	FK	20	1	TBD	POST-PLATE	N / A for Pkg Type	
LM139AJ	ACTIVE	CDIP	J	14	1	TBD	A42	N / A for Pkg Type	
LM139AJB	ACTIVE	CDIP	J	14	1	TBD	A42	N / A for Pkg Type	
LM139AN	OBSOLETE	PDIP	N	14		TBD	Call TI	Call TI	
LM139AW	ACTIVE	CFP	W	14	1	TBD	A42	N / A for Pkg Type	
LM139AWB	ACTIVE	CFP	W	14	1	TBD	A42	N / A for Pkg Type	
LM139D	ACTIVE	SOIC	D	14	50	TBD	CU NIPDAU	Level-1-220C-UNLIM	
LM139DG4	ACTIVE	SOIC	D	14	50	Green (RoHS & no Sb/Br)	CU NIPDAU	Level-1-260C-UNLIM	
LM139DR	ACTIVE	SOIC	D	14	2500	TBD	CU NIPDAU	Level-1-220C-UNLIM	
LM139DRG4	ACTIVE	SOIC	D	14	2500	Green (RoHS & no Sb/Br)	CU NIPDAU	Level-1-260C-UNLIM	
LM139FK	ACTIVE	LCCC	FK	20	1	TBD	POST-PLATE	N / A for Pkg Type	
LM139FKB	ACTIVE	LCCC	FK	20	1	TBD	POST-PLATE	N / A for Pkg Type	

Orderable Device	Status (1)	Package Type	Package Drawing	Pins	Package Qty	Eco Plan (2)	Lead/ Ball Finish	MSL Peak Temp (3)	Samples (Requires Login)
LM139J	ACTIVE	CDIP	J	14	1	TBD	A42	N / A for Pkg Type	
LM139JB	ACTIVE	CDIP	J	14	1	TBD	A42	N / A for Pkg Type	
LM139N	OBSOLETE	PDIP	N	14		TBD	Call TI	Call TI	
LM139W	ACTIVE	CFP	W	14	1	TBD	A42	N / A for Pkg Type	
LM139WB	ACTIVE	CFP	W	14	1	TBD	A42	N / A for Pkg Type	
LM239AD	ACTIVE	SOIC	D	14	50	Green (RoHS & no Sb/Br)	CU NIPDAU	Level-1-260C-UNLIM	
LM239ADE4	ACTIVE	SOIC	D	14	50	Green (RoHS & no Sb/Br)	CU NIPDAU	Level-1-260C-UNLIM	
LM239ADG4	ACTIVE	SOIC	D	14	50	Green (RoHS & no Sb/Br)	CU NIPDAU	Level-1-260C-UNLIM	
LM239ADR	ACTIVE	SOIC	D	14	2500	Green (RoHS & no Sb/Br)	CU NIPDAU	Level-1-260C-UNLIM	
LM239ADRE4	ACTIVE	SOIC	D	14	2500	Green (RoHS & no Sb/Br)	CU NIPDAU	Level-1-260C-UNLIM	
LM239ADRG4	ACTIVE	SOIC	D	14	2500	Green (RoHS & no Sb/Br)	CU NIPDAU	Level-1-260C-UNLIM	
LM239AN	OBSOLETE	PDIP	N	14		TBD	Call TI	Call TI	
LM239D	ACTIVE	SOIC	D	14	50	Green (RoHS & no Sb/Br)	CU NIPDAU	Level-1-260C-UNLIM	
LM239DE4	ACTIVE	SOIC	D	14	50	Green (RoHS & no Sb/Br)	CU NIPDAU	Level-1-260C-UNLIM	
LM239DG4	ACTIVE	SOIC	D	14	50	Green (RoHS & no Sb/Br)	CU NIPDAU	Level-1-260C-UNLIM	
LM239DR	ACTIVE	SOIC	D	14	2500	Green (RoHS & no Sb/Br)	CU NIPDAU	Level-1-260C-UNLIM	
LM239DRE4	ACTIVE	SOIC	D	14	2500	Green (RoHS & no Sb/Br)	CU NIPDAU	Level-1-260C-UNLIM	
LM239DRG3	ACTIVE	SOIC	D	14	2500	Green (RoHS & no Sb/Br)	CU SN	Level-1-260C-UNLIM	
LM239DRG4	ACTIVE	SOIC	D	14	2500	Green (RoHS & no Sb/Br)	CU NIPDAU	Level-1-260C-UNLIM	
LM239N	ACTIVE	PDIP	N	14	25	Pb-Free (RoHS)	CU NIPDAU	N / A for Pkg Type	
LM239NE4	ACTIVE	PDIP	N	14	25	Pb-Free (RoHS)	CU NIPDAU	N / A for Pkg Type	

Orderable Device	Status (1)	Package Type	Package Drawing	Pins	Package Qty	Eco Plan (2)	Lead/ Ball Finish	MSL Peak Temp (3)	Samples (Requires Login)
LM239PW	ACTIVE	TSSOP	PW	14	90	Green (RoHS & no Sb/Br)	CU NIPDAU	Level-1-260C-UNLIM	
LM239PWE4	ACTIVE	TSSOP	PW	14	90	Green (RoHS & no Sb/Br)	CU NIPDAU	Level-1-260C-UNLIM	
LM239PWG4	ACTIVE	TSSOP	PW	14	90	Green (RoHS & no Sb/Br)	CU NIPDAU	Level-1-260C-UNLIM	
LM239PWR	ACTIVE	TSSOP	PW	14	2000	Green (RoHS & no Sb/Br)	CU NIPDAU	Level-1-260C-UNLIM	
LM239PWRE4	ACTIVE	TSSOP	PW	14	2000	Green (RoHS & no Sb/Br)	CU NIPDAU	Level-1-260C-UNLIM	
LM239PWRG4	ACTIVE	TSSOP	PW	14	2000	Green (RoHS & no Sb/Br)	CU NIPDAU	Level-1-260C-UNLIM	
LM2901AVQDR	ACTIVE	SOIC	D	14	2500	Green (RoHS & no Sb/Br)	CU NIPDAU	Level-1-260C-UNLIM	
LM2901AVQDRG4	ACTIVE	SOIC	D	14	2500	Green (RoHS & no Sb/Br)	CU NIPDAU	Level-1-260C-UNLIM	
LM2901AVQPWR	ACTIVE	TSSOP	PW	14	2000	TBD	CU NIPDAU	Level-1-250C-UNLIM	
LM2901AVQPWRG4	ACTIVE	TSSOP	PW	14	2000	Green (RoHS & no Sb/Br)	CU NIPDAU	Level-1-260C-UNLIM	
LM2901D	ACTIVE	SOIC	D	14	50	Green (RoHS & no Sb/Br)	CU NIPDAU	Level-1-260C-UNLIM	
LM2901DE4	ACTIVE	SOIC	D	14	50	Green (RoHS & no Sb/Br)	CU NIPDAU	Level-1-260C-UNLIM	
LM2901DG4	ACTIVE	SOIC	D	14	50	Green (RoHS & no Sb/Br)	CU NIPDAU	Level-1-260C-UNLIM	
LM2901DR	ACTIVE	SOIC	D	14	2500	Green (RoHS & no Sb/Br)	CU NIPDAU	Level-1-260C-UNLIM	
LM2901DRE4	ACTIVE	SOIC	D	14	2500	Green (RoHS & no Sb/Br)	CU NIPDAU	Level-1-260C-UNLIM	
LM2901DRG3	ACTIVE	SOIC	D	14	2500	Green (RoHS & no Sb/Br)	CU SN	Level-1-260C-UNLIM	
LM2901DRG4	ACTIVE	SOIC	D	14	2500	Green (RoHS & no Sb/Br)	CU NIPDAU	Level-1-260C-UNLIM	
LM2901N	ACTIVE	PDIP	N	14	25	Pb-Free (RoHS)	CU NIPDAU	N / A for Pkg Type	
LM2901NE4	ACTIVE	PDIP	N	14	25	Pb-Free (RoHS)	CU NIPDAU	N / A for Pkg Type	

Orderable Device	Status (1)	Package Type	Package Drawing	Pins	Package Qty	Eco Plan (2)	Lead/ Ball Finish	MSL Peak Temp (3)	Samples (Requires Login)
LM2901NSR	ACTIVE	SO	NS	14	2000	Green (RoHS & no Sb/Br)	CU NIPDAU	Level-1-260C-UNLIM	
LM2901NSRE4	ACTIVE	SO	NS	14	2000	Green (RoHS & no Sb/Br)	CU NIPDAU	Level-1-260C-UNLIM	
LM2901NSRG4	ACTIVE	SO	NS	14	2000	Green (RoHS & no Sb/Br)	CU NIPDAU	Level-1-260C-UNLIM	
LM2901PW	ACTIVE	TSSOP	PW	14	90	Green (RoHS & no Sb/Br)	CU NIPDAU	Level-1-260C-UNLIM	
LM2901PWE4	ACTIVE	TSSOP	PW	14	90	Green (RoHS & no Sb/Br)	CU NIPDAU	Level-1-260C-UNLIM	
LM2901PWG4	ACTIVE	TSSOP	PW	14	90	Green (RoHS & no Sb/Br)	CU NIPDAU	Level-1-260C-UNLIM	
LM2901PWLE	OBSOLETE	TSSOP	PW	14		TBD	Call TI	Call TI	
LM2901PWR	ACTIVE	TSSOP	PW	14	2000	Green (RoHS & no Sb/Br)	CU NIPDAU	Level-1-260C-UNLIM	
LM2901PWRE4	ACTIVE	TSSOP	PW	14		Green (RoHS & no Sb/Br)	CU NIPDAU	Level-1-260C-UNLIM	
LM2901PWRG3	ACTIVE	TSSOP	PW	14	2000	Green (RoHS & no Sb/Br)	CU SN	Level-1-260C-UNLIM	
LM2901PWRG4	ACTIVE	TSSOP	PW	14	2000	Green (RoHS & no Sb/Br)	CU NIPDAU	Level-1-260C-UNLIM	
LM2901QD	OBSOLETE	SOIC	D	14		TBD	Call TI	Call TI	
LM2901QN	OBSOLETE	PDIP	N	14		TBD	Call TI	Call TI	
LM2901VQDR	ACTIVE	SOIC	D	14	2500	Green (RoHS & no Sb/Br)	CU NIPDAU	Level-1-260C-UNLIM	
LM2901VQDRG4	ACTIVE	SOIC	D	14	2500	Green (RoHS & no Sb/Br)	CU NIPDAU	Level-1-260C-UNLIM	
LM2901VQPWR	ACTIVE	TSSOP	PW	14	2000	TBD	CU NIPDAU	Level-1-250C-UNLIM	
LM2901VQPWRG4	ACTIVE	TSSOP	PW	14	2000	Green (RoHS & no Sb/Br)	CU NIPDAU	Level-1-260C-UNLIM	
LM339AD	ACTIVE	SOIC	D	14	50	Green (RoHS & no Sb/Br)	CU NIPDAU	Level-1-260C-UNLIM	
LM339ADBR	ACTIVE	SSOP	DB	14	2000	Green (RoHS & no Sb/Br)	CU NIPDAU	Level-1-260C-UNLIM	

Orderable Device	Status (1)	Package Type	Package Drawing	Pins	Package Qty	Eco Plan (2)	Lead/ Ball Finish	MSL Peak Temp (3)	Samples (Requires Login)
LM339ADBRG4	ACTIVE	SSOP	DB	14	2000	Green (RoHS & no Sb/Br)	CU NIPDAU	Level-1-260C-UNLIM	
LM339ADE4	ACTIVE	SOIC	D	14	50	Green (RoHS & no Sb/Br)	CU NIPDAU	Level-1-260C-UNLIM	
LM339ADG4	ACTIVE	SOIC	D	14	50	Green (RoHS & no Sb/Br)	CU NIPDAU	Level-1-260C-UNLIM	
LM339ADR	ACTIVE	SOIC	D	14	2500	Green (RoHS & no Sb/Br)	CU NIPDAU	Level-1-260C-UNLIM	
LM339ADRE4	ACTIVE	SOIC	D	14	2500	Green (RoHS & no Sb/Br)	CU NIPDAU	Level-1-260C-UNLIM	
LM339ADRG4	ACTIVE	SOIC	D	14	2500	Green (RoHS & no Sb/Br)	CU NIPDAU	Level-1-260C-UNLIM	
LM339AN	ACTIVE	PDIP	N	14	25	Pb-Free (RoHS)	CU NIPDAU	N / A for Pkg Type	
LM339ANE4	ACTIVE	PDIP	N	14	25	Pb-Free (RoHS)	CU NIPDAU	N / A for Pkg Type	
LM339ANSR	ACTIVE	SO	NS	14	2000	Green (RoHS & no Sb/Br)	CU NIPDAU	Level-1-260C-UNLIM	
LM339ANSRG4	ACTIVE	SO	NS	14	2000	Green (RoHS & no Sb/Br)	CU NIPDAU	Level-1-260C-UNLIM	
LM339APW	ACTIVE	TSSOP	PW	14	90	Green (RoHS & no Sb/Br)	CU NIPDAU	Level-1-260C-UNLIM	
LM339APWE4	ACTIVE	TSSOP	PW	14	90	Green (RoHS & no Sb/Br)	CU NIPDAU	Level-1-260C-UNLIM	
LM339APWG4	ACTIVE	TSSOP	PW	14	90	Green (RoHS & no Sb/Br)	CU NIPDAU	Level-1-260C-UNLIM	
LM339APWR	ACTIVE	TSSOP	PW	14	2000	Green (RoHS & no Sb/Br)	CU NIPDAU	Level-1-260C-UNLIM	
LM339APWRE4	ACTIVE	TSSOP	PW	14	2000	Green (RoHS & no Sb/Br)	CU NIPDAU	Level-1-260C-UNLIM	
LM339APWRG4	ACTIVE	TSSOP	PW	14	2000	Green (RoHS & no Sb/Br)	CU NIPDAU	Level-1-260C-UNLIM	
LM339D	ACTIVE	SOIC	D	14	50	Green (RoHS & no Sb/Br)	CU NIPDAU	Level-1-260C-UNLIM	
LM339DBLE	OBSOLETE	SSOP	DB	14		TBD	Call TI	Call TI	
LM339DBR	ACTIVE	SSOP	DB	14	2000	Green (RoHS & no Sb/Br)	CU NIPDAU	Level-1-260C-UNLIM	

Orderable Device	Status (1)	Package Type	Package Drawing	Pins	Package Qty	Eco Plan (2)	Lead/ Ball Finish	MSL Peak Temp (3)	Samples (Requires Login)
LM339DBRE4	ACTIVE	SSOP	DB	14	2000	Green (RoHS & no Sb/Br)	CU NIPDAU	Level-1-260C-UNLIM	
LM339DBRG4	ACTIVE	SSOP	DB	14	2000	Green (RoHS & no Sb/Br)	CU NIPDAU	Level-1-260C-UNLIM	
LM339DE4	ACTIVE	SOIC	D	14	50	Green (RoHS & no Sb/Br)	CU NIPDAU	Level-1-260C-UNLIM	
LM339DG4	ACTIVE	SOIC	D	14	50	Green (RoHS & no Sb/Br)	CU NIPDAU	Level-1-260C-UNLIM	
LM339DR	ACTIVE	SOIC	D	14	2500	Green (RoHS & no Sb/Br)	CU NIPDAU	Level-1-260C-UNLIM	
LM339DRE4	ACTIVE	SOIC	D	14	2500	Green (RoHS & no Sb/Br)	CU NIPDAU	Level-1-260C-UNLIM	
LM339DRG3	ACTIVE	SOIC	D	14	2500	Green (RoHS & no Sb/Br)	CU SN	Level-1-260C-UNLIM	
LM339DRG4	ACTIVE	SOIC	D	14	2500	Green (RoHS & no Sb/Br)	CU NIPDAU	Level-1-260C-UNLIM	
LM339N	ACTIVE	PDIP	N	14	25	Pb-Free (RoHS)	CU NIPDAU	N / A for Pkg Type	
LM339NE3	ACTIVE	PDIP	N	14	25	Pb-Free (RoHS)	CU SN	N / A for Pkg Type	
LM339NE4	ACTIVE	PDIP	N	14	25	Pb-Free (RoHS)	CU NIPDAU	N / A for Pkg Type	
LM339NSLE	OBSOLETE	SO	NS	14		TBD	Call TI	Call TI	
LM339NSR	ACTIVE	SO	NS	14	2000	Green (RoHS & no Sb/Br)	CU NIPDAU	Level-1-260C-UNLIM	
LM339NSRG4	ACTIVE	SO	NS	14	2000	Green (RoHS & no Sb/Br)	CU NIPDAU	Level-1-260C-UNLIM	
LM339PW	ACTIVE	TSSOP	PW	14	90	Green (RoHS & no Sb/Br)	CU NIPDAU	Level-1-260C-UNLIM	
LM339PWE4	ACTIVE	TSSOP	PW	14	90	Green (RoHS & no Sb/Br)	CU NIPDAU	Level-1-260C-UNLIM	
LM339PWG4	ACTIVE	TSSOP	PW	14	90	Green (RoHS & no Sb/Br)	CU NIPDAU	Level-1-260C-UNLIM	
LM339PWLE	OBSOLETE	TSSOP	PW	14		TBD	Call TI	Call TI	
LM339PWR	ACTIVE	TSSOP	PW	14	2000	Green (RoHS & no Sb/Br)	CU NIPDAU	Level-1-260C-UNLIM	
LM339PWRE4	ACTIVE	TSSOP	PW	14	2000	Green (RoHS & no Sb/Br)	CU NIPDAU	Level-1-260C-UNLIM	

Orderable Device	Status [1]	Package Type	Package Drawing	Pins	Package Qty	Eco Plan [2]	Lead/ Ball Finish	MSL Peak Temp [3]	Samples (Requires Login)
LM339PWRG3	ACTIVE	TSSOP	PW	14	2000	Green (RoHS & no Sb/Br)	CU SN	Level-1-260C-UNLIM	
LM339PWRG4	ACTIVE	TSSOP	PW	14	2000	Green (RoHS & no Sb/Br)	CU NIPDAU	Level-1-260C-UNLIM	
LM339Y	OBSOLETE			0		TBD	Call TI	Call TI	

[1] The marketing status values are defined as follows:
ACTIVE: Product device recommended for new designs.
LIFEBUY: TI has announced that the device will be discontinued, and a lifetime-buy period is in effect.
NRND: Not recommended for new designs. Device is in production to support existing customers, but TI does not recommend using this part in a new design.
PREVIEW: Device has been announced but is not in production. Samples may or may not be available.
OBSOLETE: TI has discontinued the production of the device.

[2] Eco Plan - The planned eco-friendly classification: Pb-Free (RoHS), Pb-Free (RoHS Exempt), or Green (RoHS & no Sb/Br) - please check http://www.ti.com/productcontent for the latest availability information and additional product content details.
TBD: The Pb-Free/Green conversion plan has not been defined.
Pb-Free (RoHS): TI's terms "Lead-Free" or "Pb-Free" mean semiconductor products that are compatible with the current RoHS requirements for all 6 substances, including the requirement that lead not exceed 0.1% by weight in homogeneous materials. Where designed to be soldered at high temperatures, TI Pb-Free products are suitable for use in specified lead-free processes.
Pb-Free (RoHS Exempt): This component has a RoHS exemption for either 1) lead-based flip-chip solder bumps used between the die and package, or 2) lead-based die adhesive used between the die and leadframe. The component is otherwise considered Pb-Free (RoHS compatible) as defined above.
Green (RoHS & no Sb/Br): TI defines "Green" to mean Pb-Free (RoHS compatible), and free of Bromine (Br) and Antimony (Sb) based flame retardants (Br or Sb do not exceed 0.1% by weight in homogeneous material)

[3] MSL, Peak Temp. -- The Moisture Sensitivity Level rating according to the JEDEC industry standard classifications, and peak solder temperature.

Important Information and Disclaimer: The information provided on this page represents TI's knowledge and belief as of the date that it is provided. TI bases its knowledge and belief on information provided by third parties, and makes no representation or warranty as to the accuracy of such information. Efforts are underway to better integrate information from third parties. TI has taken and continues to take reasonable steps to provide representative and accurate information but may not have conducted destructive testing or chemical analysis on incoming materials and chemicals. TI and TI suppliers consider certain information to be proprietary, and thus CAS numbers and other limited information may not be available for release.

In no event shall TI's liability arising out of such information exceed the total purchase price of the TI part(s) at issue in this document sold by TI to Customer on an annual basis.

OTHER QUALIFIED VERSIONS OF LM139, LM139-SP, LM239A, LM2901, LM2901AV, LM2901V :

- Catalog: LM139

- Automotive: LM239A-Q1, LM2901-Q1, LM2901AV-Q1, LM2901V-Q1

- Enhanced Product: LM239A-EP
- Space: LM139-SP

NOTE: Qualified Version Definitions:

- Catalog - TI's standard catalog product
- Automotive - Q100 devices qualified for high-reliability automotive applications targeting zero defects
- Enhanced Product - Supports Defense, Aerospace and Medical Applications
- Space - Radiation tolerant, ceramic packaging and qualified for use in Space-based application

TAPE AND REEL INFORMATION

REEL DIMENSIONS

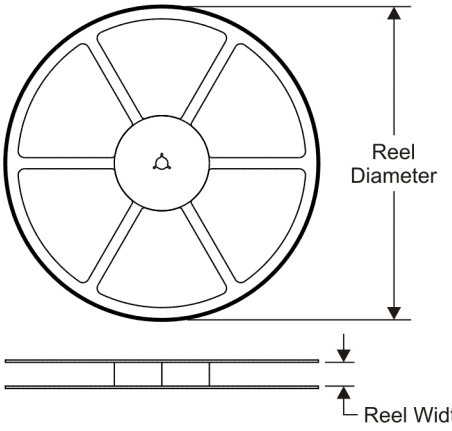

TAPE DIMENSIONS

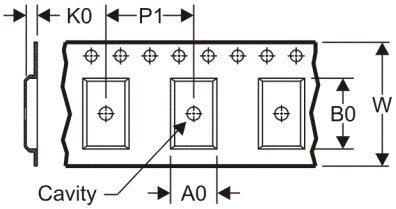

A0	Dimension designed to accommodate the component width
B0	Dimension designed to accommodate the component length
K0	Dimension designed to accommodate the component thickness
W	Overall width of the carrier tape
P1	Pitch between successive cavity centers

QUADRANT ASSIGNMENTS FOR PIN 1 ORIENTATION IN TAPE

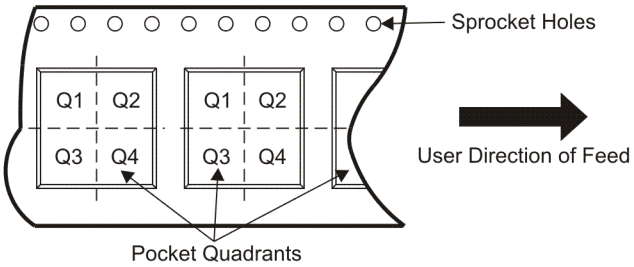

*All dimensions are nominal

Device	Package Type	Package Drawing	Pins	SPQ	Reel Diameter (mm)	Reel Width W1 (mm)	A0 (mm)	B0 (mm)	K0 (mm)	P1 (mm)	W (mm)	Pin1 Quadrant
LM139ADR	SOIC	D	14	2500	330.0	16.4	6.5	9.0	2.1	8.0	16.0	Q1
LM139DR	SOIC	D	14	2500	330.0	16.4	6.5	9.0	2.1	8.0	16.0	Q1
LM239ADR	SOIC	D	14	2500	330.0	16.4	6.5	9.0	2.1	8.0	16.0	Q1
LM239DR	SOIC	D	14	2500	330.0	16.4	6.5	9.0	2.1	8.0	16.0	Q1
LM239PWR	TSSOP	PW	14	2000	330.0	12.4	6.9	5.6	1.6	8.0	12.0	Q1
LM2901AVQPWR	TSSOP	PW	14	2000	330.0	12.4	6.9	5.6	1.6	8.0	12.0	Q1
LM2901DR	SOIC	D	14	2500	330.0	16.4	6.5	9.0	2.1	8.0	16.0	Q1
LM2901DRG4	SOIC	D	14	2500	330.0	16.4	6.5	9.0	2.1	8.0	16.0	Q1
LM2901NSR	SO	NS	14	2000	330.0	16.4	8.2	10.5	2.5	12.0	16.0	Q1
LM2901PWR	TSSOP	PW	14	2000	330.0	12.4	7.0	5.6	1.6	8.0	12.0	Q1
LM2901PWR	TSSOP	PW	14	2000	330.0	12.4	6.9	5.6	1.6	8.0	12.0	Q1
LM2901PWRG3	TSSOP	PW	14	2000	330.0	12.4	7.0	5.6	1.6	8.0	12.0	Q1
LM2901VQPWR	TSSOP	PW	14	2000	330.0	12.4	6.9	5.6	1.6	8.0	12.0	Q1
LM339ADBR	SSOP	DB	14	2000	330.0	16.4	8.2	6.6	2.5	12.0	16.0	Q1
LM339ADR	SOIC	D	14	2500	330.0	16.4	6.5	9.0	2.1	8.0	16.0	Q1
LM339ANSR	SO	NS	14	2000	330.0	16.4	8.2	10.5	2.5	12.0	16.0	Q1
LM339APWR	TSSOP	PW	14	2000	330.0	12.4	6.9	5.6	1.6	8.0	12.0	Q1
LM339DBR	SSOP	DB	14	2000	330.0	16.4	8.2	6.6	2.5	12.0	16.0	Q1

Device	Package Type	Package Drawing	Pins	SPQ	Reel Diameter (mm)	Reel Width W1 (mm)	A0 (mm)	B0 (mm)	K0 (mm)	P1 (mm)	W (mm)	Pin1 Quadrant
LM339DR	SOIC	D	14	2500	330.0	16.4	6.5	9.0	2.1	8.0	16.0	Q1
LM339DRG4	SOIC	D	14	2500	330.0	16.4	6.5	9.0	2.1	8.0	16.0	Q1
LM339NSR	SO	NS	14	2000	330.0	16.4	8.2	10.5	2.5	12.0	16.0	Q1
LM339PWR	TSSOP	PW	14	2000	330.0	12.4	7.0	5.6	1.6	8.0	12.0	Q1
LM339PWR	TSSOP	PW	14	2000	330.0	12.4	6.9	5.6	1.6	8.0	12.0	Q1
LM339PWRG3	TSSOP	PW	14	2000	330.0	12.4	7.0	5.6	1.6	8.0	12.0	Q1

TAPE AND REEL BOX DIMENSIONS

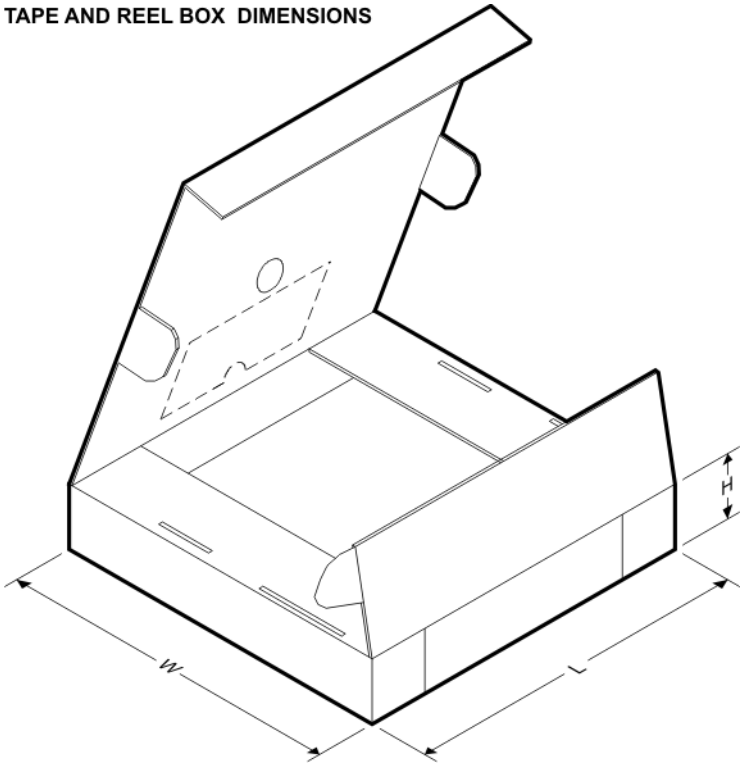

*All dimensions are nominal

Device	Package Type	Package Drawing	Pins	SPQ	Length (mm)	Width (mm)	Height (mm)
LM139ADR	SOIC	D	14	2500	346.0	346.0	33.0
LM139DR	SOIC	D	14	2500	346.0	346.0	33.0
LM239ADR	SOIC	D	14	2500	346.0	346.0	33.0
LM239DR	SOIC	D	14	2500	346.0	346.0	33.0
LM239PWR	TSSOP	PW	14	2000	346.0	346.0	29.0
LM2901AVQPWR	TSSOP	PW	14	2000	346.0	346.0	29.0
LM2901DR	SOIC	D	14	2500	346.0	346.0	33.0
LM2901DRG4	SOIC	D	14	2500	346.0	346.0	33.0
LM2901NSR	SO	NS	14	2000	346.0	346.0	33.0
LM2901PWR	TSSOP	PW	14	2000	364.0	364.0	27.0
LM2901PWR	TSSOP	PW	14	2000	346.0	346.0	29.0

Device	Package Type	Package Drawing	Pins	SPQ	Length (mm)	Width (mm)	Height (mm)
LM2901PWRG3	TSSOP	PW	14	2000	364.0	364.0	27.0
LM2901VQPWR	TSSOP	PW	14	2000	346.0	346.0	29.0
LM339ADBR	SSOP	DB	14	2000	346.0	346.0	33.0
LM339ADR	SOIC	D	14	2500	346.0	346.0	33.0
LM339ANSR	SO	NS	14	2000	346.0	346.0	33.0
LM339APWR	TSSOP	PW	14	2000	346.0	346.0	29.0
LM339DBR	SSOP	DB	14	2000	346.0	346.0	33.0
LM339DR	SOIC	D	14	2500	346.0	346.0	33.0
LM339DRG4	SOIC	D	14	2500	346.0	346.0	33.0
LM339NSR	SO	NS	14	2000	346.0	346.0	33.0
LM339PWR	TSSOP	PW	14	2000	364.0	364.0	27.0
LM339PWR	TSSOP	PW	14	2000	346.0	346.0	29.0
LM339PWRG3	TSSOP	PW	14	2000	364.0	364.0	27.0

J (R–GDIP–T**) CERAMIC DUAL IN–LINE PACKAGE

14 LEADS SHOWN

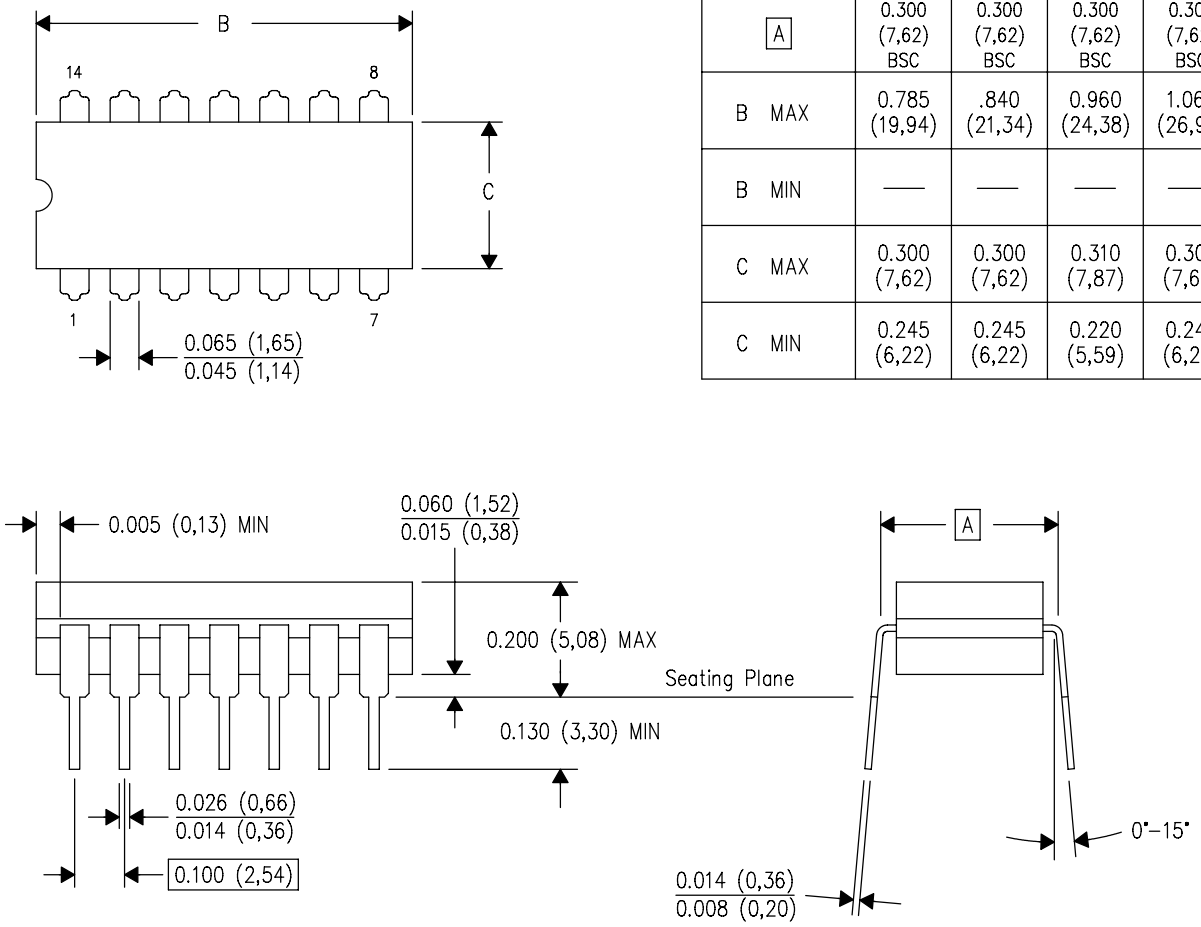

DIM \ PINS **	14	16	18	20
A	0.300 (7,62) BSC	0.300 (7,62) BSC	0.300 (7,62) BSC	0.300 (7,62) BSC
B MAX	0.785 (19,94)	.840 (21,34)	0.960 (24,38)	1.060 (26,92)
B MIN	—	—	—	—
C MAX	0.300 (7,62)	0.300 (7,62)	0.310 (7,87)	0.300 (7,62)
C MIN	0.245 (6,22)	0.245 (6,22)	0.220 (5,59)	0.245 (6,22)

4040083/F 03/03

NOTES:
- A. All linear dimensions are in inches (millimeters).
- B. This drawing is subject to change without notice.
- C. This package is hermetically sealed with a ceramic lid using glass frit.
- D. Index point is provided on cap for terminal identification only on press ceramic glass frit seal only.
- E. Falls within MIL STD 1835 GDIP1–T14, GDIP1–T16, GDIP1–T18 and GDIP1–T20.

W (R–GDFP–F14) CERAMIC DUAL FLATPACK

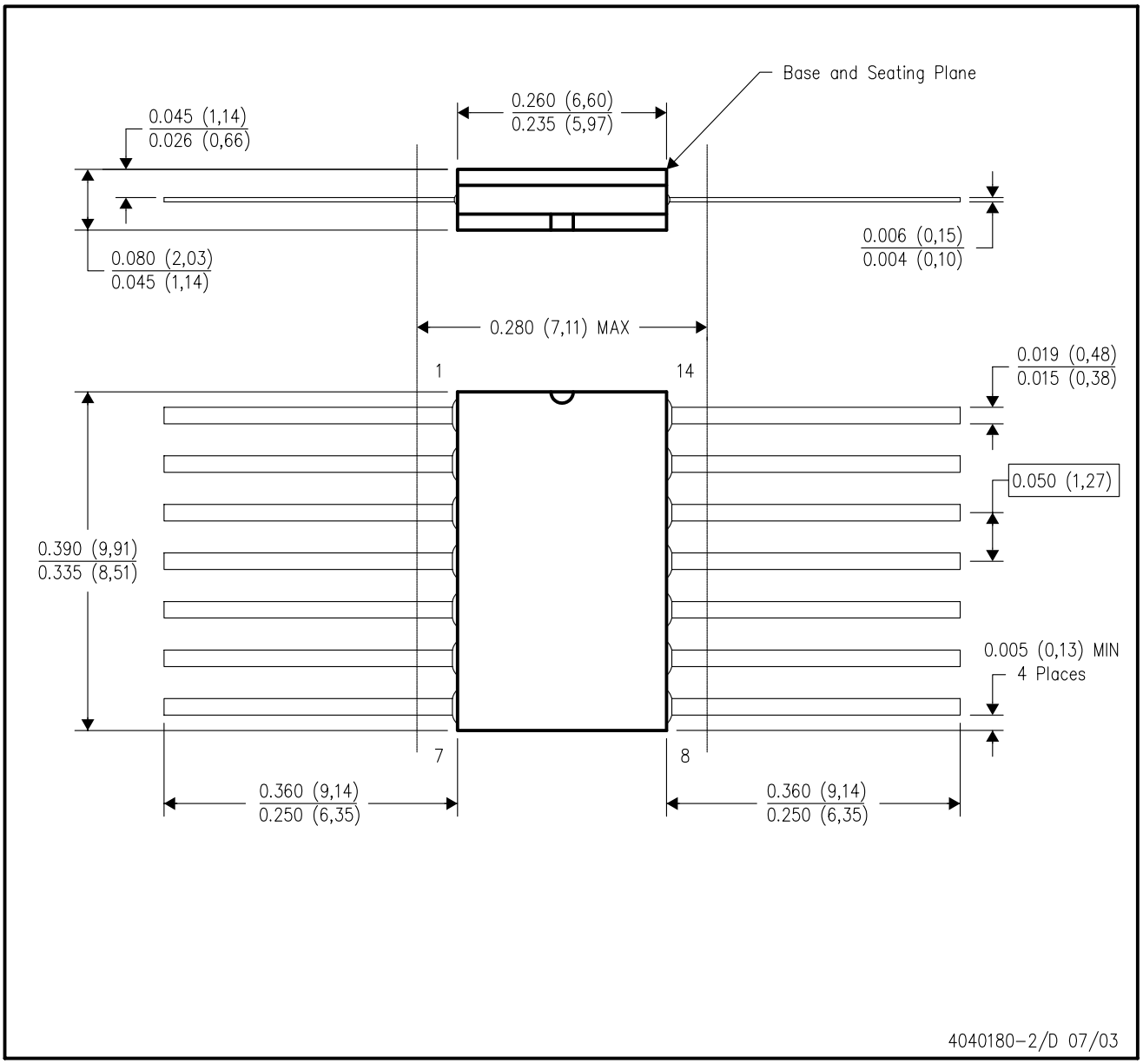

NOTES:
A. All linear dimensions are in inches (millimeters).
B. This drawing is subject to change without notice.
C. This package can be hermetically sealed with a ceramic lid using glass frit.
D. Index point is provided on cap for terminal identification only.
E. Falls within MIL STD 1835 GDFP1–F14 and JEDEC MO–092AB

FK (S–CQCC–N**) LEADLESS CERAMIC CHIP CARRIER

28 TERMINAL SHOWN

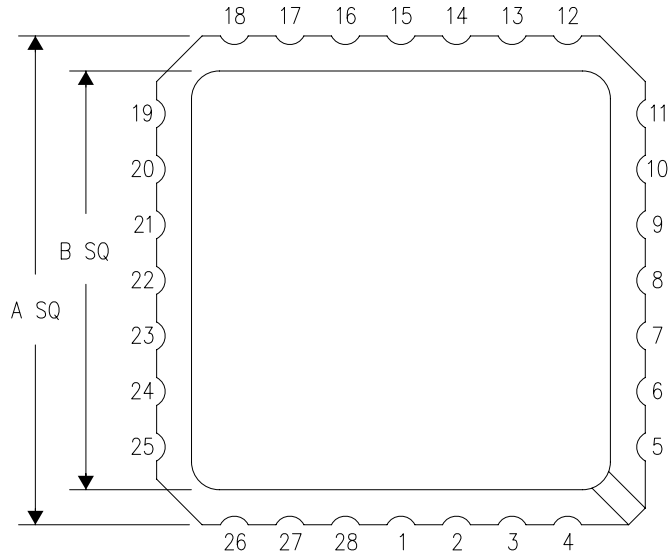

NO. OF TERMINALS **	A		B	
	MIN	MAX	MIN	MAX
20	0.342 (8,69)	0.358 (9,09)	0.307 (7,80)	0.358 (9,09)
28	0.442 (11,23)	0.458 (11,63)	0.406 (10,31)	0.458 (11,63)
44	0.640 (16,26)	0.660 (16,76)	0.495 (12,58)	0.560 (14,22)
52	0.740 (18,78)	0.761 (19,32)	0.495 (12,58)	0.560 (14,22)
68	0.938 (23,83)	0.962 (24,43)	0.850 (21,6)	0.858 (21,8)
84	1.141 (28,99)	1.165 (29,59)	1.047 (26,6)	1.063 (27,0)

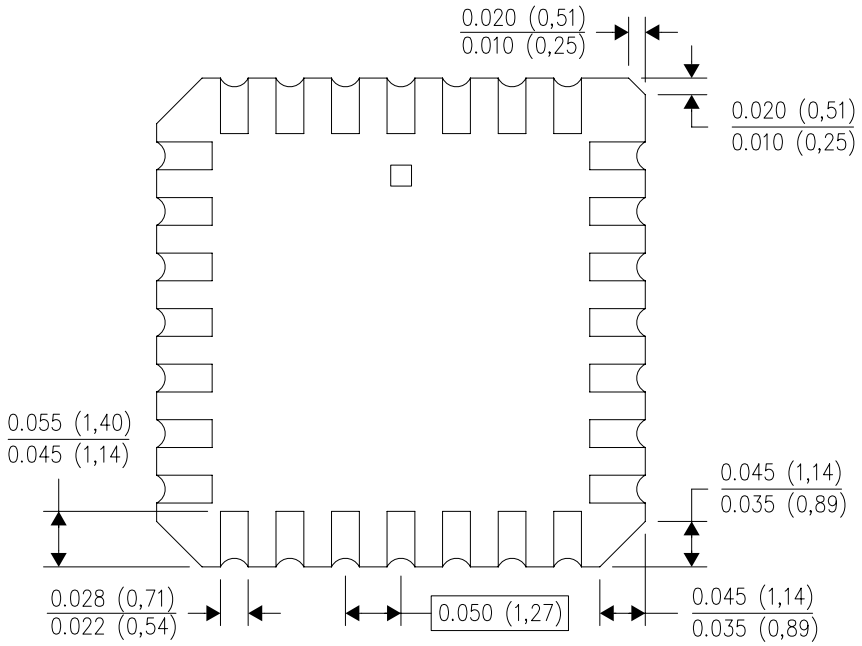

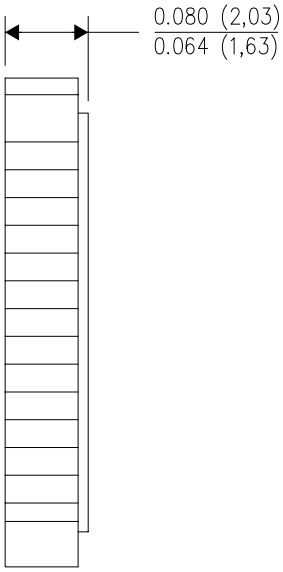

4040140/D 01/11

NOTES:
A. All linear dimensions are in inches (millimeters).
B. This drawing is subject to change without notice.
C. This package can be hermetically sealed with a metal lid.
D. Falls within JEDEC MS–004

N (R–PDIP–T**) PLASTIC DUAL–IN–LINE PACKAGE

16 PINS SHOWN

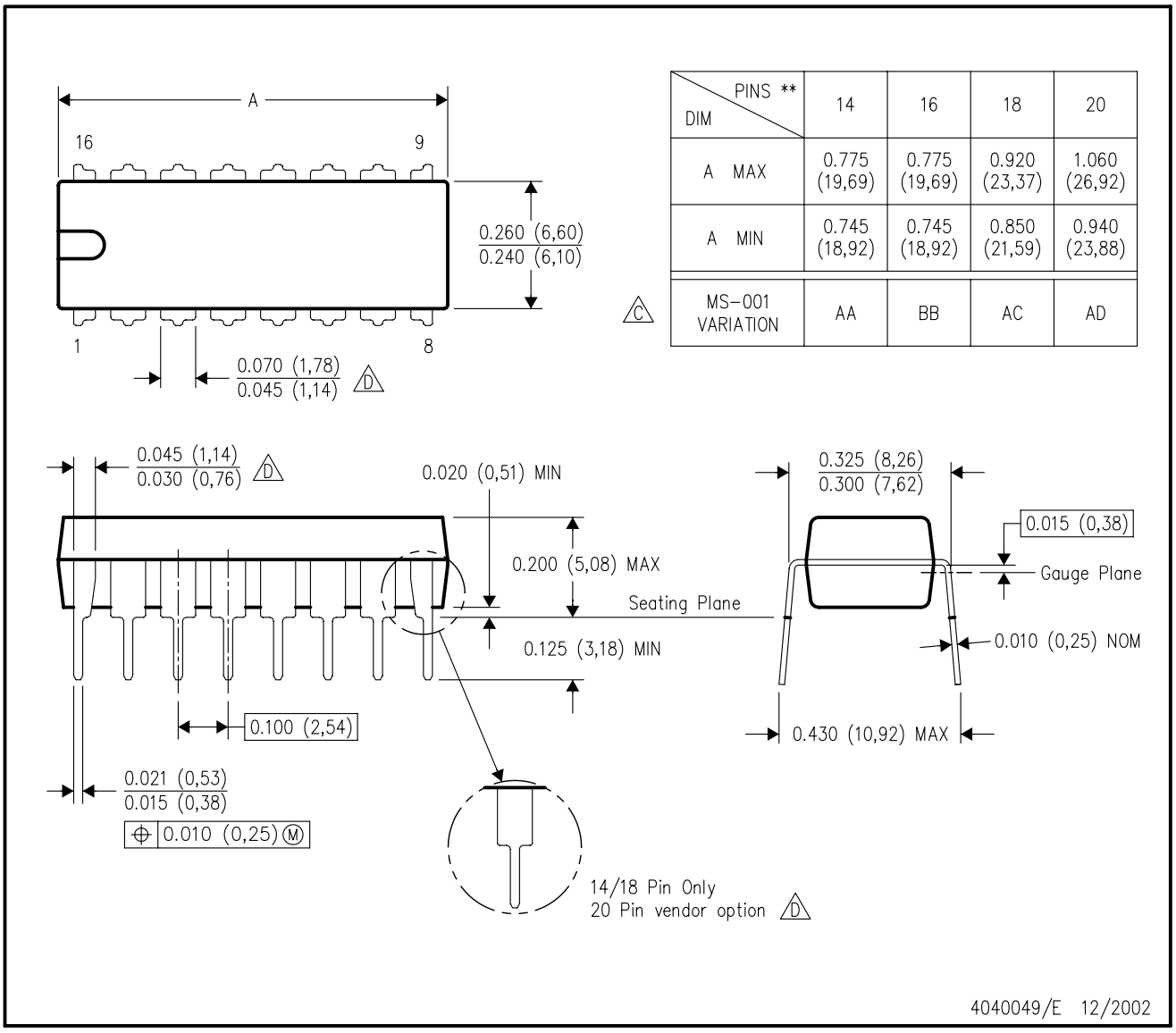

DIM \ PINS **	14	16	18	20
A MAX	0.775 (19,69)	0.775 (19,69)	0.920 (23,37)	1.060 (26,92)
A MIN	0.745 (18,92)	0.745 (18,92)	0.850 (21,59)	0.940 (23,88)
MS–001 VARIATION (C)	AA	BB	AC	AD

NOTES:
A. All linear dimensions are in inches (millimeters).
B. This drawing is subject to change without notice.
C. Falls within JEDEC MS–001, except 18 and 20 pin minimum body length (Dim A).
D. The 20 pin end lead shoulder width is a vendor option, either half or full width.

D (R–PDSO–G14) PLASTIC SMALL OUTLINE

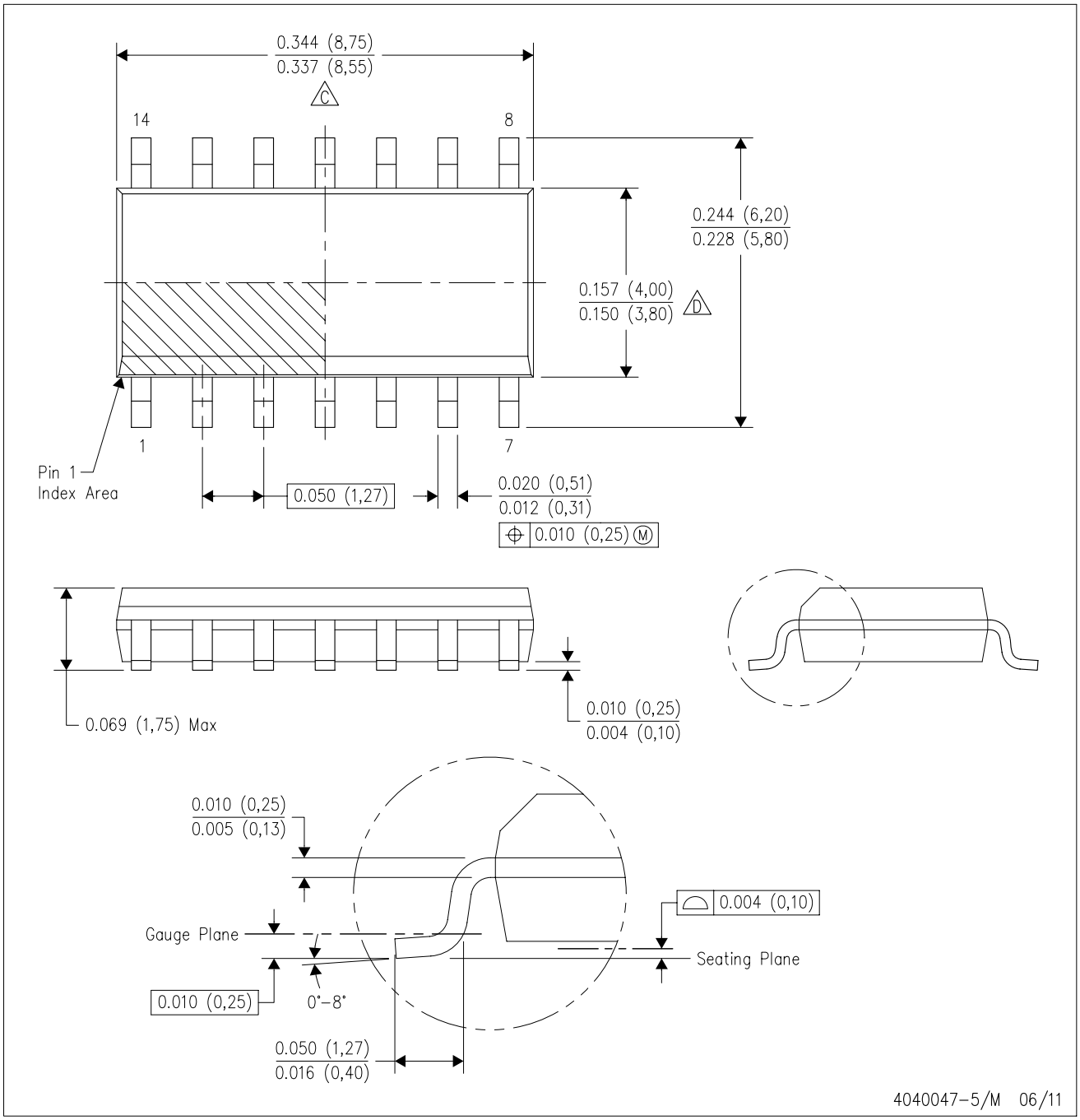

NOTES:
A. All linear dimensions are in inches (millimeters).
B. This drawing is subject to change without notice.
C. Body length does not include mold flash, protrusions, or gate burrs. Mold flash, protrusions, or gate burrs shall not exceed 0.006 (0,15) each side.
D. Body width does not include interlead flash. Interlead flash shall not exceed 0.017 (0,43) each side.
E. Reference JEDEC MS–012 variation AB.

D (R–PDSO–G14) PLASTIC SMALL OUTLINE

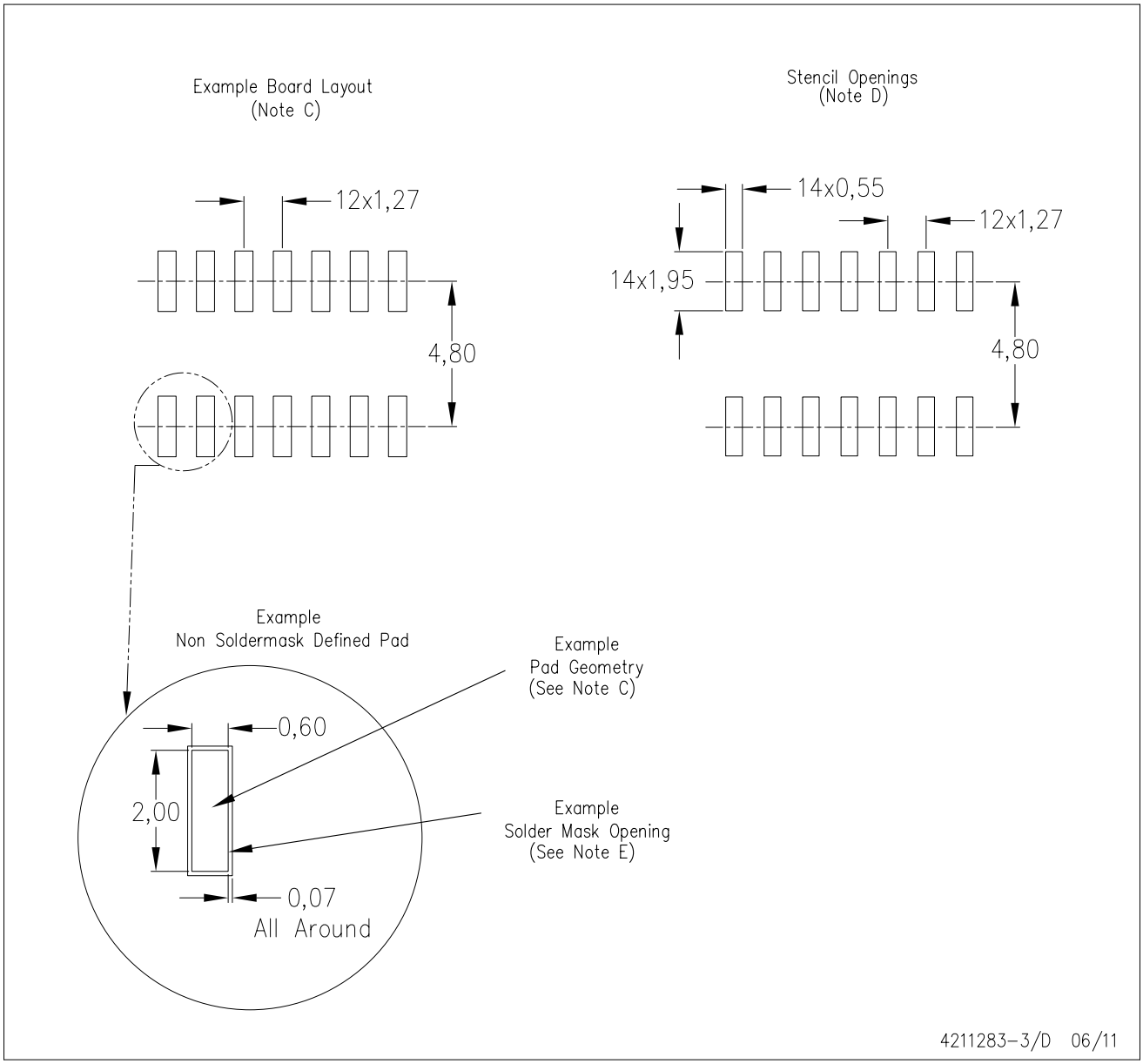

NOTES:
A. All linear dimensions are in millimeters.
B. This drawing is subject to change without notice.
C. Publication IPC–7351 is recommended for alternate designs.
D. Laser cutting apertures with trapezoidal walls and also rounding corners will offer better paste release. Customers should contact their board assembly site for stencil design recommendations. Refer to IPC–7525 for other stencil recommendations.
E. Customers should contact their board fabrication site for solder mask tolerances between and around signal pads.

PW (R–PDSO–G14) PLASTIC SMALL OUTLINE

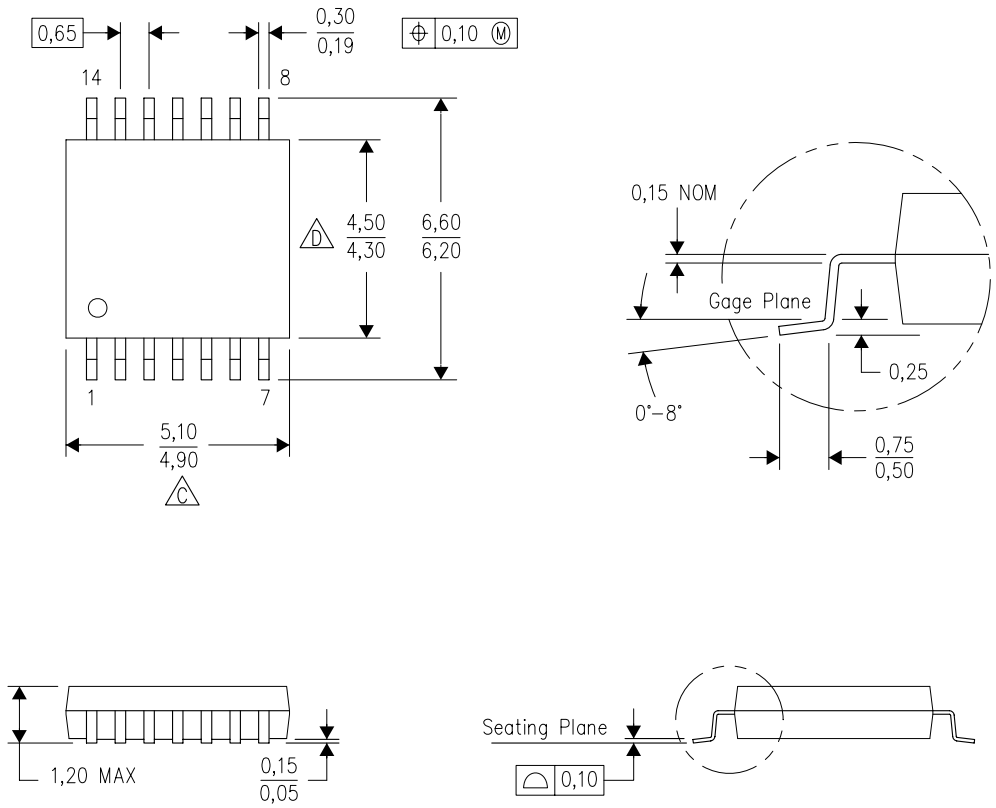

NOTES:
A. All linear dimensions are in millimeters. Dimensioning and tolerancing per ASME Y14.5M–1994.
B. This drawing is subject to change without notice.
C. Body length does not include mold flash, protrusions, or gate burrs. Mold flash, protrusions, or gate burrs shall not exceed 0,15 each side.
D. Body width does not include interlead flash. Interlead flash shall not exceed 0,25 each side.
E. Falls within JEDEC MO–153

PW (R–PDSO–G14) PLASTIC SMALL OUTLINE

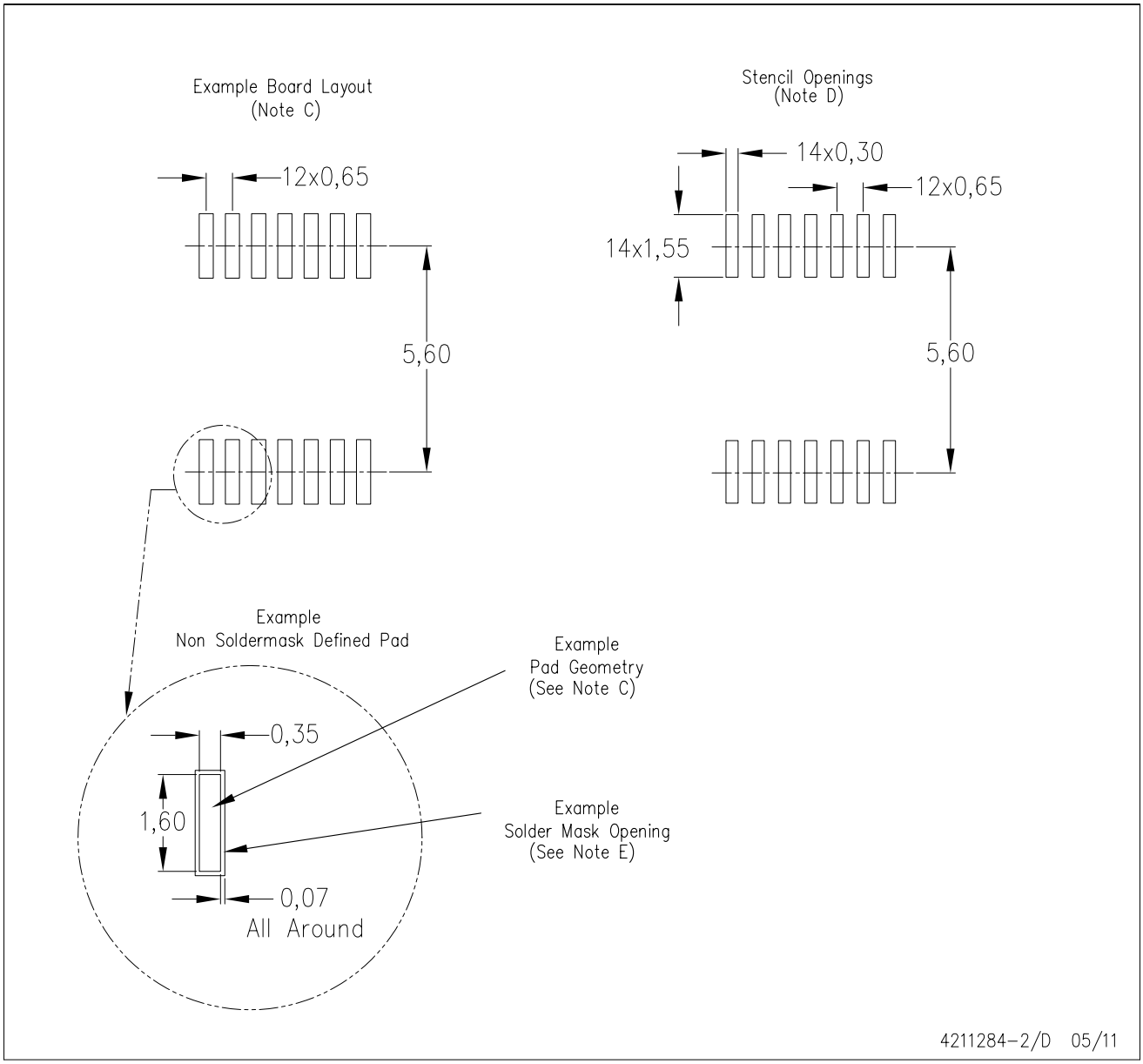

NOTES:
A. All linear dimensions are in millimeters.
B. This drawing is subject to change without notice.
C. Publication IPC–7351 is recommended for alternate designs.
D. Laser cutting apertures with trapezoidal walls and also rounding corners will offer better paste release. Customers should contact their board assembly site for stencil design recommendations. Refer to IPC–7525 for other stencil recommendations.
E. Customers should contact their board fabrication site for solder mask tolerances between and around signal pads.

MECHANICAL DATA

NS (R-PDSO-G)** **PLASTIC SMALL-OUTLINE PACKAGE**

14-PINS SHOWN

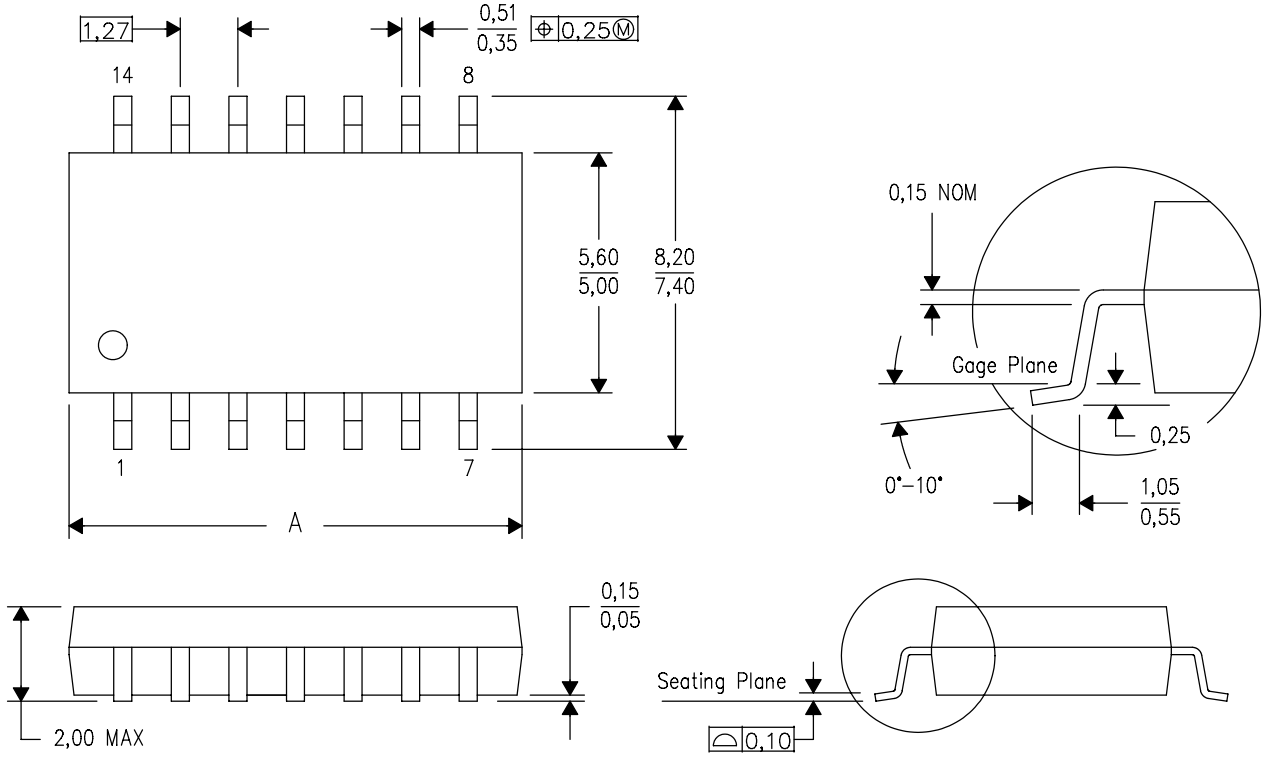

DIM \ PINS **	14	16	20	24
A MAX	10,50	10,50	12,90	15,30
A MIN	9,90	9,90	12,30	14,70

4040062/C 03/03

NOTES:
A. All linear dimensions are in millimeters.
B. This drawing is subject to change without notice.
C. Body dimensions do not include mold flash or protrusion, not to exceed 0,15.

DB (R-PDSO-G)** **PLASTIC SMALL-OUTLINE**

28 PINS SHOWN

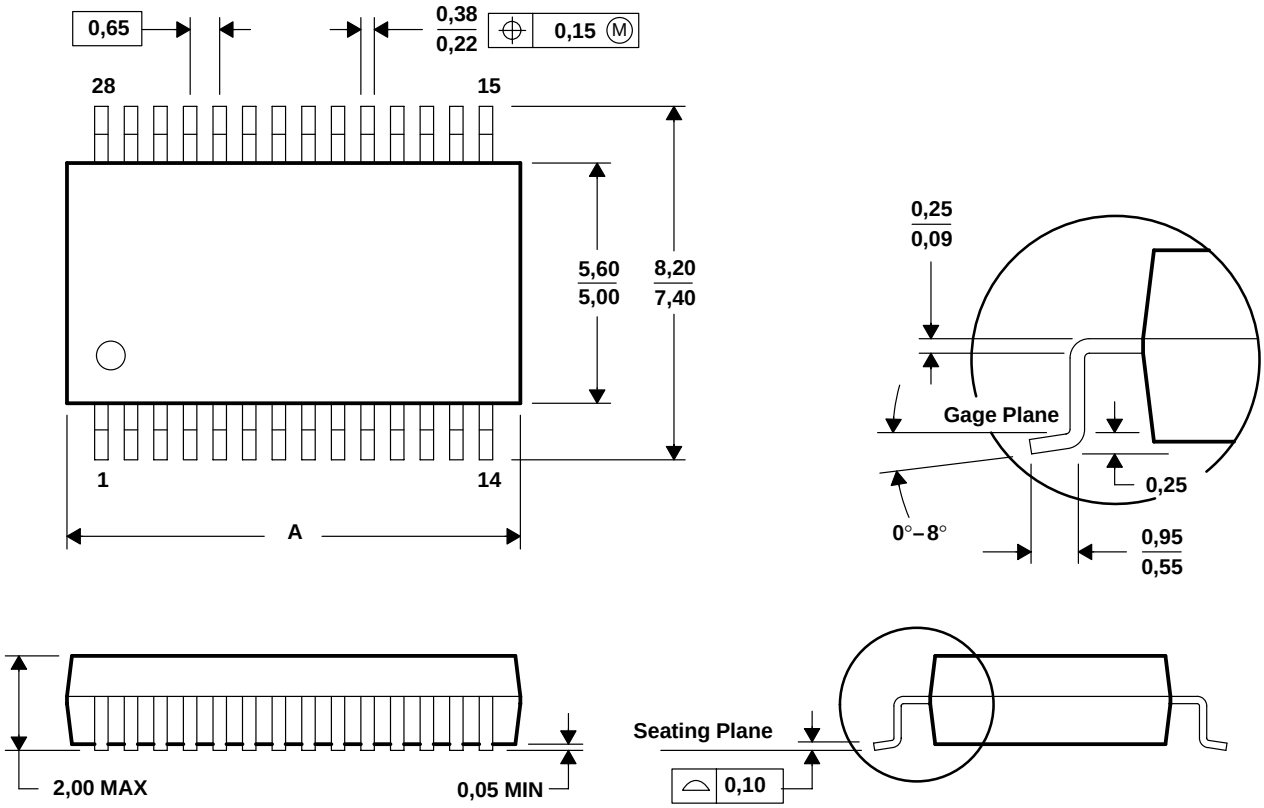

DIM \ PINS **	14	16	20	24	28	30	38
A MAX	6,50	6,50	7,50	8,50	10,50	10,50	12,90
A MIN	5,90	5,90	6,90	7,90	9,90	9,90	12,30

4040065 /E 12/01

NOTES: A. All linear dimensions are in millimeters.
B. This drawing is subject to change without notice.
C. Body dimensions do not include mold flash or protrusion not to exceed 0,15.
D. Falls within JEDEC MO-150

IMPORTANT NOTICE

Texas Instruments Incorporated and its subsidiaries (TI) reserve the right to make corrections, modifications, enhancements, improvements, and other changes to its products and services at any time and to discontinue any product or service without notice. Customers should obtain the latest relevant information before placing orders and should verify that such information is current and complete. All products are sold subject to TI's terms and conditions of sale supplied at the time of order acknowledgment.

TI warrants performance of its hardware products to the specifications applicable at the time of sale in accordance with TI's standard warranty. Testing and other quality control techniques are used to the extent TI deems necessary to support this warranty. Except where mandated by government requirements, testing of all parameters of each product is not necessarily performed.

TI assumes no liability for applications assistance or customer product design. Customers are responsible for their products and applications using TI components. To minimize the risks associated with customer products and applications, customers should provide adequate design and operating safeguards.

TI does not warrant or represent that any license, either express or implied, is granted under any TI patent right, copyright, mask work right, or other TI intellectual property right relating to any combination, machine, or process in which TI products or services are used. Information published by TI regarding third-party products or services does not constitute a license from TI to use such products or services or a warranty or endorsement thereof. Use of such information may require a license from a third party under the patents or other intellectual property of the third party, or a license from TI under the patents or other intellectual property of TI.

Reproduction of TI information in TI data books or data sheets is permissible only if reproduction is without alteration and is accompanied by all associated warranties, conditions, limitations, and notices. Reproduction of this information with alteration is an unfair and deceptive business practice. TI is not responsible or liable for such altered documentation. Information of third parties may be subject to additional restrictions.

Resale of TI products or services with statements different from or beyond the parameters stated by TI for that product or service voids all express and any implied warranties for the associated TI product or service and is an unfair and deceptive business practice. TI is not responsible or liable for any such statements.

TI products are not authorized for use in safety-critical applications (such as life support) where a failure of the TI product would reasonably be expected to cause severe personal injury or death, unless officers of the parties have executed an agreement specifically governing such use. Buyers represent that they have all necessary expertise in the safety and regulatory ramifications of their applications, and acknowledge and agree that they are solely responsible for all legal, regulatory and safety-related requirements concerning their products and any use of TI products in such safety-critical applications, notwithstanding any applications-related information or support that may be provided by TI. Further, Buyers must fully indemnify TI and its representatives against any damages arising out of the use of TI products in such safety-critical applications.

TI products are neither designed nor intended for use in military/aerospace applications or environments unless the TI products are specifically designated by TI as military-grade or "enhanced plastic." Only products designated by TI as military-grade meet military specifications. Buyers acknowledge and agree that any such use of TI products which TI has not designated as military-grade is solely at the Buyer's risk, and that they are solely responsible for compliance with all legal and regulatory requirements in connection with such use.

TI products are neither designed nor intended for use in automotive applications or environments unless the specific TI products are designated by TI as compliant with ISO/TS 16949 requirements. Buyers acknowledge and agree that, if they use any non-designated products in automotive applications, TI will not be responsible for any failure to meet such requirements.

Following are URLs where you can obtain information on other Texas Instruments products and application solutions:

Products		**Applications**	
Audio	www.ti.com/audio	Communications and Telecom	www.ti.com/communications
Amplifiers	amplifier.ti.com	Computers and Peripherals	www.ti.com/computers
Data Converters	dataconverter.ti.com	Consumer Electronics	www.ti.com/consumer-apps
DLP® Products	www.dlp.com	Energy and Lighting	www.ti.com/energy
DSP	dsp.ti.com	Industrial	www.ti.com/industrial
Clocks and Timers	www.ti.com/clocks	Medical	www.ti.com/medical
Interface	interface.ti.com	Security	www.ti.com/security
Logic	logic.ti.com	Space, Avionics and Defense	www.ti.com/space-avionics-defense
Power Mgmt	power.ti.com	Transportation and Automotive	www.ti.com/automotive
Microcontrollers	microcontroller.ti.com	Video and Imaging	www.ti.com/video
RFID	www.ti-rfid.com		
OMAP Mobile Processors	www.ti.com/omap		
Wireless Connctivity	www.ti.com/wirelessconnectivity		

TI E2E Community Home Page e2e.ti.com

Mailing Address: Texas Instruments, Post Office Box 655303, Dallas, Texas 75265
Copyright © 2011, Texas Instruments Incorporated